Goodman®

Air Conditioning & Heating

Product Specifications

13 SEER / R-410A

1½- to 5-Ton

Cooling Capacity:
18,000 - 60,000 BTU/h

GSX13

Energy-Efficient Split System Air Conditioner

The Goodman® brand GSX13 uses the environmentally friendly refrigerant R-410A and features operating sound levels that are among the best in the heating and cooling industry. With its 13 SEER rating, the GSX13 will help reduce energy consumption throughout the life of the system compared to lower SEER-rated equipment.

Standard Features

- R-410A environmentally friendly refrigerant
- Energy-efficient compressor
- Factory-installed filter dryer
- Copper tube/enhanced aluminum fin coil
- Service valves with sweat connections and easy-access gauge ports
- Contactor with lug connection
- Ground lug connection
- ARI Certified; ETL Listed

Cabinet Features

- Unique Goodman® sound control top design
- Steel louver coil guard
- Heavy-gauge galvanized-steel cabinet
- Attractive Architectural Gray powder-paint finish with 500-hour salt-spray approval
- Top and side maintenance access
- Single-panel access to controls with space provided for field-installed accessories
- When properly anchored, meets the 2001 Florida Building Code unit integrity requirements for hurricane-type winds (Anchor bracket kits available.)

Contents

Nomenclature 2
Product Specifications 3
Dimensions 5
Expanded Cooling Data 6
ARI Performance Ratings 26
Wiring Diagrams 41
Accessories 43

NOMENCLATURE

G	S	X	13	036	1	A	A
1	2	3	4,5	6,7,8	9	10	11

Brand

G Goodman® (Standard Feature Set Models)

S Goodman® (High Feature Set Models)

Product Category

S Split System

Unit Type

C Condenser R-22

X Condenser R-410A

H Heat Pump R-22

Z Heat Pump R-410A

Efficiency

13 13 SEER

14 14 SEER

16 16 SEER

Nominal Capacity

018	1½ Tons	048	4 Tons
024	2 Tons	060	5 Tons
030	2½ Tons	090	7½ tons
036	3 Tons	120	10 Tons
042	3½ Tons		

Electrical

1 208/230 V, 1 Phase, 60 Hz

2 220/240 V, 1 Phase, 50 Hz

3 208/230 V, 3 Phase, 60 Hz

4 460 V, 3 Phase, 60 Hz

5 380/415 V, 3 Phase, 50 Hz

Engineering *

Major Revision

Engineering *

Minor Revision

* Neither used for order entry or inventory management.

SPECIFICATIONS

	GSX13 0181A*	GSX13 0181B*	GSX13 0241A*	GSX13 0241B*	GSX13 0301A*	GSX13 0301B*
Capacities						
Nominal Cooling (BTU/h)	18,000	18,000	24,000	24,000	30,000	30,000
SEER / EER	13 / 11	13 / 11	13 / 11	13 / 11	13 / 11	13 / 11
Decibels	72	72	72	72	73	73
Compressor						
RLA	9.0	9.0	13.4	13.5	12.8	12.8
LRA	48	48	58.3	58.3	64	64
Condenser Fan Motor						
Horsepower	1/6	1/6	1/6	1/6	1/6	1/6
FLA	1.1	1.1	1.1	1.1	1.1	1.1
Refrigeration System						
Refrigerant Line Size[1]						
Liquid Line Size (“O.D.)	⅜”	⅜”	⅜”	⅜”	⅜”	⅜”
Suction Line Size (“O.D.)	¾”	¾”	¾”	¾”	¾”	¾”
Refrigerant Connection Size						
Liquid Valve Size (“O.D.)	⅜”	⅜”	⅜”	⅜”	⅜”	⅜”
Suction Valve Size (“O.D.) [3] [4]	¾”	¾”	¾”	¾”	¾”	¾”
Valve Type	Sweat	Sweat	Sweat	Sweat	Sweat	Sweat
Refrigerant Charge	120	75	116	82	129	84
Shipped with Orifice Size	0.049	0.051	0.053	0.057	0.059	0.059
Electrical Data						
Voltage-Hz / Phase	208/230-60/1	208/230-60/1	208/230-60/1	208/230-60/1	208/230-60/1	208/230-60/1
Minimum Circuit Ampacity [2]	12.3	12.3	17.9	18.0	17.1	17.1
Max. Overcurrent Protection [3]	20 amps	20 amps	30 amps	30 amps	30 amps	30 amps
Min / Max Volts	197/253	197/253	197/253	197/253	197/253	197/253
Electrical Conduit Size	½” or ¾”	½” or ¾”	½” or ¾”	½” or ¾”	½” or ¾”	½” or ¾”
Ship Weight (lbs)	178	149	178	151	180	152

[1] Wire size should be determined in accordance with National Electrical Codes; extensive wire runs will require larger wire sizes
[2] Must use time-delay fuses or HACR-type circuit breakers of the same size as noted.
[3] Installer will need to supply ¾” to ⅞” adapters for suction line connections.
[4] Installer will need to supply ⅞” to 1⅛” adapters for suction line connections.

Notes

- Always check the S&R plate for electrical data on the unit being installed.
- Unit is charged with refrigerant for 15’ of ⅜” liquid line. System charge must be adjusted per Installation Instructions Final Charge Procedure.

Specifications (cont.)

	GSX13 0361A*	GSX13 0421A*	GSX13 0421B*	GSX13 0481A*	GSX13 0481B*	GSX13 0601A*
Capacities						
Nominal Cooling (BTU/h)	36,000	42,000	42,000	48,000	48,000	60,000
SEER / EER	13 / 11	13 / 11	13 / 11	13 / 11	13 / 11	13 / 11
Decibels	74	75	75	76	76	73
Compressor						
RLA	16.6	17.9	17.9	19.8	19.9	26.4
LRA	79	112	112	109	109	134
Condenser Fan Motor						
Horsepower	1/6	1/6	1/4	1/4	1/4	1/4
FLA	1.1	1.1	1.5	1.5	1.5	1.5
Refrigeration System						
Refrigerant Line Size[1]						
Liquid Line Size (“O.D.)	⅜”	⅜”	⅜”	⅜”	⅜”	⅜”
Suction Line Size (“O.D.)	⅞”	1⅛”	1⅛”	1⅛”	1⅛”	1⅛”
Refrigerant Connection Size						
Liquid Valve Size (“O.D.)	⅜”	⅜”	⅜”	⅜”	⅜”	⅜”
Suction Valve Size (“O.D.) [3] [4]	¾” [3]	⅞” [4]	⅞” [4]	⅞” [4]	⅞” [4]	⅞” [4]
Valve Type	Sweat	Sweat	Sweat	Sweat	Sweat	Sweat
Refrigerant Charge	131	151	127	166	131	187
Shipped with Orifice Size	0.068	0.074	0.076	0.080	0.080	0.092
Electrical Data						
Voltage-Hz / Phase	208/230-60/1	208/230-60/1	208/230-60/1	208/230-60/1	208/230-60/1	208/230-60/1
Minimum Circuit Ampacity [2]	21.9	23.5	23.9	26.3	26.3	34.5
Max. Overcurrent Protection [3]	35 amps	40 amps	40 amps	45 amps	45 amps	60 amps
Min / Max Volts	197/253	197/253	197/253	197/253	197/253	197/253
Electrical Conduit Size	½” or ¾”	½” or ¾”	½” or ¾”	½” or ¾”	½” or ¾”	½” or ¾”
Ship Weight (lbs)	197	219	194	225	195	240

[1] Wire size should be determined in accordance with National Electrical Codes; extensive wire runs will require larger wire sizes
[2] Must use time-delay fuses or HACR-type circuit breakers of the same size as noted.
[3] Installer will need to supply ¾” to ⅞” adapters for suction line connections.
[4] Installer will need to supply ⅞” to 1⅛” adapters for suction line connections.

Notes

- Always check the S&R plate for electrical data on the unit being installed.
- Unit is charged with refrigerant for 15’ of ⅜” liquid line. System charge must be adjusted per Installation Instructions Final Charge Procedure.

DIMENSIONS

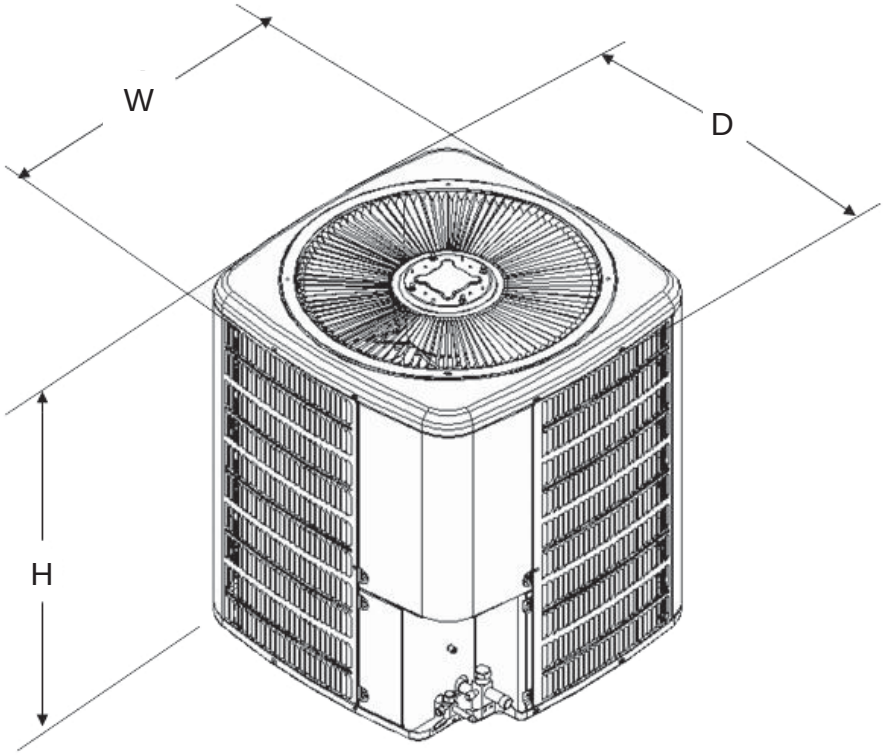

Model	Dimensions		
	W”	D”	H”
GSX130181A*	26”	26”	32¼”
GSX130181B*	26”	26”	27½”
GSX130241A*	26”	26”	32¼”
GSX130241B*	26”	26”	27½”
GSX130301A*	26”	26”	32¼”
GSX130301B*	26”	26”	27½”
GSX130361A*	29”	29”	32¼”
GSX130421A*	29”	29”	34¼”
GSX130421B*	29”	29”	36¼”
GSX130481A*	29”	29”	38¼”
GSX130481B*	29”	29”	36¼”
GSX130601A*	35½”	35½”	38¼”

EXPANDED COOLING DATA — GSX130181* / CA*F1824*6***

			Outdoor Ambient Temperature																							
			65ºF				75ºF				85ºF				95ºF				105ºF				115ºF			
			Entering Indoor Wet Bulb Temperature																							
IDB	Airflow		59	63	67	71	59	63	67	71	59	63	67	71	59	63	67	71	59	63	67	71	59	63	67	71
70	675	MBh	17.6	18.3	20.0	-	17.2	17.9	19.6	-	16.8	17.4	19.1	-	16.4	17.0	18.6	-	15.6	16.2	17.7	-	14.4	15.0	16.4	-
		S/T	0.72	0.60	0.42	-	0.75	0.63	0.43	-	0.77	0.64	0.44	-	0.79	0.66	0.46	-	0.82	0.69	0.48	-	0.83	0.69	0.48	-
		ΔT	17	15	11	-	18	15	12	-	18	15	12	-	18	15	12	-	17	15	11	-	16	14	11	-
		kW	1.26	1.29	1.33	-	1.36	1.38	1.43	-	1.44	1.47	1.52	-	1.51	1.54	1.59	-	1.57	1.61	1.66	-	1.63	1.66	1.72	-
		Amps	4.6	4.7	4.9	-	5.0	5.1	5.3	-	5.4	5.6	5.8	-	5.8	6.0	6.2	-	6.2	6.3	6.6	-	6.6	6.7	7.0	-
		Hi PR	213	230	242	-	239	258	272	-	272	293	309	-	310	334	352	-	349	375	396	-	385	415	438	-
		Lo PR	105	112	122	-	111	118	129	-	115	123	134	-	121	129	141	-	127	135	147	-	131	140	152	-
	600	MBh	17.1	17.7	19.4	-	16.7	17.3	19.0	-	16.3	16.9	18.5	-	15.9	16.5	18.1	-	15.1	15.7	17.2	-	14.0	14.5	15.9	-
		S/T	0.69	0.58	0.40	-	0.71	0.60	0.41	-	0.73	0.61	0.42	-	0.76	0.63	0.44	-	0.78	0.65	0.45	-	0.79	0.66	0.46	-
		ΔT	18	16	12	-	18	16	12	-	18	16	12	-	18	16	12	-	18	16	12	-	17	15	11	-
		kW	1.25	1.28	1.32	-	1.35	1.37	1.42	-	1.43	1.46	1.50	-	1.50	1.53	1.58	-	1.56	1.60	1.65	-	1.61	1.65	1.70	-
		Amps	4.6	4.7	4.9	-	5.0	5.1	5.3	-	5.4	5.5	5.7	-	5.8	5.9	6.1	-	6.1	6.3	6.5	-	6.5	6.7	6.9	-
		Hi PR	211	227	240	-	237	255	269	-	270	290	306	-	307	330	349	-	345	372	392	-	382	411	434	-
		Lo PR	104	111	121	-	110	117	127	-	114	121	132	-	120	127	139	-	126	134	146	-	130	138	151	-
	525	MBh	15.8	16.4	17.9	-	15.4	16.0	17.5	-	15.1	15.6	17.1	-	14.7	15.2	16.7	-	14.0	14.5	15.9	-	12.9	13.4	14.7	-
		S/T	0.66	0.55	0.38	-	0.69	0.57	0.40	-	0.71	0.59	0.41	-	0.73	0.61	0.42	-	0.76	0.63	0.44	-	0.76	0.64	0.44	-
		ΔT	18	16	12	-	19	16	12	-	19	16	12	-	19	16	12	-	18	16	12	-	17	15	11	-
		kW	1.22	1.25	1.29	-	1.31	1.34	1.38	-	1.39	1.42	1.47	-	1.46	1.49	1.54	-	1.52	1.56	1.61	-	1.57	1.61	1.66	-
		Amps	4.5	4.6	4.7	-	4.8	4.9	5.1	-	5.2	5.4	5.6	-	5.6	5.7	5.9	-	6.0	6.1	6.3	-	6.3	6.5	6.7	-
		Hi PR	205	220	233	-	230	247	261	-	261	281	297	-	298	320	338	-	335	361	381	-	370	398	421	-
		Lo PR	101	107	117	-	106	113	124	-	111	118	129	-	116	124	135	-	122	130	141	-	126	134	146	-
75	675	MBh	17.9	18.5	20.0	21.5	17.5	18.0	19.5	21.0	17.1	17.6	19.1	20.5	16.7	**17.2**	18.6	20.0	15.9	16.3	17.7	19.0	14.7	15.1	16.4	17.6
		S/T	0.82	0.73	0.56	0.36	0.85	0.76	0.58	0.37	0.87	0.78	0.59	0.38	0.90	**0.81**	0.61	0.39	0.93	0.84	0.63	0.41	0.94	0.84	0.64	0.41
		ΔT	20	18	15	10	20	19	15	11	20	19	15	11	20	**19**	15	11	20	19	15	11	19	17	14	10
		kW	1.27	1.30	1.34	1.38	1.37	1.40	1.44	1.48	1.45	1.48	1.53	1.58	1.52	**1.56**	1.61	1.66	1.59	1.62	1.67	1.73	1.64	1.68	1.73	1.79
		Amps	4.7	4.8	4.9	5.1	5.1	5.2	5.3	5.5	5.5	5.6	5.8	6.0	5.9	**6.0**	6.2	6.5	6.3	6.4	6.6	6.9	6.6	6.8	7.0	7.3
		Hi PR	216	232	245	255	242	260	275	287	275	296	313	326	313	**337**	356	371	352	379	400	418	389	419	442	461
		Lo PR	106	113	123	131	112	119	130	139	116	124	135	144	122	**130**	142	151	128	136	149	158	133	141	154	164
	600	MBh	17.4	17.9	19.4	20.8	17.0	17.5	19.0	20.3	16.6	17.1	18.5	19.9	16.2	**16.7**	18.1	19.4	15.4	15.8	17.2	18.4	14.3	14.7	15.9	17.1
		S/T	0.78	0.70	0.53	0.34	0.81	0.73	0.55	0.35	0.83	0.74	0.56	0.36	0.86	**0.77**	0.58	0.37	0.89	0.80	0.60	0.39	0.90	0.80	0.61	0.39
		ΔT	21	19	16	11	21	19	16	11	21	19	16	11	21	**20**	16	11	21	19	16	11	20	18	15	10
		kW	1.26	1.29	1.33	1.37	1.36	1.38	1.43	1.47	1.44	1.47	1.52	1.56	1.51	**1.54**	1.59	1.65	1.57	1.61	1.66	1.71	1.63	1.66	1.72	1.77
		Amps	4.6	4.7	4.9	5.1	5.0	5.1	5.3	5.5	5.4	5.6	5.8	6.0	5.8	**6.0**	6.2	6.4	6.2	6.3	6.6	6.8	6.6	6.7	7.0	7.2
		Hi PR	213	230	242	253	239	258	272	284	272	293	309	323	310	**334**	352	368	349	375	396	414	386	415	438	457
		Lo PR	105	112	122	130	111	118	129	137	115	123	134	143	121	**129**	141	150	127	135	147	157	131	140	152	162
	525	MBh	16.1	16.5	17.9	19.2	15.7	16.2	17.5	18.8	15.3	15.8	17.1	18.3	15.0	**15.4**	16.7	17.9	14.2	14.6	15.8	17.0	13.2	13.5	14.7	15.7
		S/T	0.75	0.68	0.51	0.33	0.78	0.70	0.53	0.34	0.80	0.72	0.54	0.35	0.83	**0.74**	0.56	0.36	0.86	0.77	0.58	0.37	0.87	0.78	0.59	0.38
		ΔT	21	20	16	11	22	20	16	11	22	20	16	11	22	**20**	16	11	21	20	16	11	20	18	15	10
		kW	1.23	1.26	1.30	1.34	1.32	1.35	1.39	1.44	1.41	1.43	1.48	1.53	1.48	**1.51**	1.55	1.61	1.54	1.57	1.62	1.67	1.59	1.62	1.67	1.73
		Amps	4.5	4.6	4.8	4.9	4.9	5.0	5.2	5.3	5.3	5.4	5.6	5.8	5.7	**5.8**	6.0	6.2	6.0	6.2	6.4	6.6	6.4	6.5	6.8	7.0
		Hi PR	207	223	235	245	232	250	264	275	264	284	300	313	301	**324**	342	357	338	364	385	401	374	402	425	443
		Lo PR	102	108	118	126	108	114	125	133	112	119	130	138	117	**125**	136	145	123	131	143	152	127	135	148	157

IDB: Entering Indoor Dry Bulb Temperature
High and low pressures are measured at the liquid and suction service valves.

Shaded area reflects ACCA (TVA) conditions

Amps = outdoor unit amps (comp.+fan)
kW = Total system power

EXPANDED COOLING DATA — GSX130181* / CA*F1824*6*** (CONT.)

			Outdoor Ambient Temperature																							
			65ºF				75ºF				85ºF				95ºF				105ºF				115ºF			
			Entering Indoor Wet Bulb Temperature																							
IDB	Airflow		59	63	67	71	59	63	67	71	59	63	67	71	59	63	67	71	59	63	67	71	59	63	67	71
80	675	MBh	18.3	18.7	19.9	21.3	17.8	18.2	19.5	20.8	17.4	17.8	19.0	20.3	17.0	17.4	18.5	19.8	16.1	16.5	17.6	18.8	14.9	15.3	16.3	17.4
		S/T	0.90	0.84	0.69	0.51	0.93	0.88	0.71	0.53	0.96	0.90	0.73	0.55	1.00	0.93	0.75	0.56	1.00	0.96	0.78	0.58	1.00	0.97	0.79	0.59
		ΔT	22	21	19	15	23	22	19	15	23	22	19	15	23	22	19	15	22	22	19	15	20	20	18	14
		kW	1.28	1.31	1.35	1.39	1.38	1.41	1.45	1.50	1.46	1.49	1.54	1.59	1.54	1.57	1.62	1.67	1.60	1.63	1.69	1.74	1.65	1.69	1.75	1.80
		Amps	4.7	4.8	5.0	5.2	5.1	5.2	5.4	5.6	5.5	5.7	5.9	6.1	5.9	6.1	6.3	6.5	6.3	6.5	6.7	6.9	6.7	6.9	7.1	7.4
		Hi PR	218	234	247	258	244	263	278	290	278	299	316	329	316	341	360	375	356	383	405	422	393	423	447	466
		Lo PR	107	114	124	132	113	120	131	140	118	125	137	145	123	131	143	153	129	138	150	160	134	142	155	166
	600	MBh	17.7	18.1	19.4	20.7	17.3	17.7	18.9	20.2	16.9	17.3	18.5	19.7	16.5	16.8	**18.0**	19.2	15.7	16.0	17.1	18.3	14.5	14.8	15.8	16.9
		S/T	0.86	0.81	0.66	0.49	0.89	0.83	0.68	0.51	0.91	0.86	0.70	0.52	0.94	0.88	**0.72**	0.54	0.98	0.92	0.75	0.56	0.99	0.92	0.75	0.56
		ΔT	23	22	19	16	24	23	20	16	24	23	20	16	24	23	**20**	16	23	22	20	16	22	21	18	15
		kW	1.27	1.30	1.34	1.38	1.37	1.40	1.44	1.49	1.45	1.48	1.53	1.58	1.52	1.56	**1.61**	1.66	1.59	1.62	1.67	1.73	1.64	1.68	1.73	1.79
		Amps	4.7	4.8	4.9	5.1	5.1	5.2	5.3	5.5	5.5	5.6	5.8	6.0	5.9	6.0	**6.2**	6.5	6.3	6.4	6.6	6.9	6.6	6.8	7.0	7.3
		Hi PR	216	232	245	255	242	260	275	287	275	296	313	326	313	337	**356**	371	352	379	401	418	389	419	443	462
		Lo PR	106	113	123	131	112	119	130	139	116	124	135	144	122	130	**142**	151	128	136	149	158	133	141	154	164
	525	MBh	16.4	16.7	17.9	19.1	16.0	16.3	17.4	18.6	15.6	15.9	17.0	18.2	15.2	15.6	16.6	17.8	14.5	14.8	15.8	16.9	13.4	13.7	14.6	15.6
		S/T	0.83	0.78	0.63	0.47	0.86	0.80	0.65	0.49	0.88	0.83	0.67	0.50	0.91	0.85	0.69	0.52	0.94	0.88	0.72	0.54	0.95	0.89	0.73	0.54
		ΔT	24	23	20	16	24	23	20	16	24	23	20	16	24	23	20	16	24	23	20	16	22	21	19	15
		kW	1.24	1.27	1.31	1.35	1.34	1.36	1.41	1.45	1.42	1.45	1.49	1.54	1.49	1.52	1.57	1.62	1.55	1.58	1.63	1.69	1.60	1.64	1.69	1.74
		Amps	4.5	4.7	4.8	5.0	4.9	5.0	5.2	5.4	5.3	5.5	5.7	5.9	5.7	5.9	6.0	6.3	6.1	6.2	6.4	6.7	6.4	6.6	6.8	7.1
		Hi PR	209	225	238	248	235	252	267	278	267	287	303	316	304	327	345	360	342	368	388	405	378	406	429	448
		Lo PR	103	109	119	127	109	116	126	134	113	120	131	140	119	126	138	147	124	132	144	154	129	137	149	159
85	675	MBh	18.6	18.9	19.8	21.2	18.1	18.5	19.4	20.7	17.7	18.1	18.9	20.2	17.3	17.6	18.4	19.7	16.4	16.7	17.5	18.7	15.2	15.5	16.2	17.3
		S/T	0.94	0.91	0.82	0.67	0.98	0.94	0.85	0.69	1.00	0.97	0.87	0.71	1.00	1.00	0.90	0.73	1.00	1.00	0.94	0.76	1.00	1.00	0.94	0.77
		ΔT	24	23	22	19	24	24	22	19	24	24	22	19	24	24	23	20	22	23	22	19	21	21	21	18
		kW	1.29	1.32	1.36	1.40	1.39	1.42	1.46	1.51	1.47	1.51	1.55	1.60	1.55	1.58	1.63	1.69	1.61	1.65	1.70	1.76	1.67	1.70	1.76	1.82
		Amps	4.8	4.9	5.0	5.2	5.1	5.3	5.4	5.7	5.6	5.7	5.9	6.1	6.0	6.1	6.3	6.6	6.4	6.5	6.7	7.0	6.8	6.9	7.2	7.4
		Hi PR	220	237	250	261	247	265	280	292	281	302	319	333	320	344	363	379	360	387	409	426	397	427	451	471
		Lo PR	108	115	126	134	114	122	133	141	119	126	138	147	125	133	145	154	131	139	152	162	135	144	157	167
	600	MBh	18.0	18.4	19.3	20.5	17.6	18.0	18.8	20.1	17.2	17.5	18.4	19.6	16.8	17.1	17.9	19.1	15.9	16.2	17.0	18.2	14.8	15.0	15.8	16.8
		S/T	0.90	0.87	0.78	0.64	0.93	0.90	0.81	0.66	0.96	0.92	0.83	0.68	0.99	0.95	0.86	0.70	1.00	0.99	0.89	0.72	1.00	1.00	0.90	0.73
		ΔT	25	24	23	20	25	25	23	20	25	25	23	20	25	25	24	20	24	25	23	20	23	23	22	19
		kW	1.28	1.31	1.35	1.39	1.38	1.41	1.45	1.50	1.46	1.49	1.54	1.59	1.54	1.57	1.62	1.67	1.60	1.63	1.69	1.74	1.65	1.69	1.75	1.80
		Amps	4.7	4.8	5.0	5.2	5.1	5.2	5.4	5.6	5.5	5.7	5.9	6.1	5.9	6.1	6.3	6.5	6.3	6.5	6.7	6.9	6.7	6.9	7.1	7.4
		Hi PR	218	234	247	258	244	263	278	290	278	299	316	329	316	341	360	375	356	383	405	422	393	423	447	466
		Lo PR	107	114	124	132	113	120	131	140	118	125	137	145	123	131	143	153	129	138	150	160	134	142	155	166
	525	MBh	16.6	17.0	17.8	19.0	16.3	16.6	17.4	18.5	15.9	16.2	16.9	18.1	15.5	15.8	16.5	17.6	14.7	15.0	15.7	16.8	13.6	13.9	14.5	15.5
		S/T	0.87	0.84	0.76	0.61	0.90	0.87	0.78	0.64	0.92	0.89	0.80	0.65	0.95	0.92	0.83	0.67	0.99	0.95	0.86	0.70	1.00	0.96	0.87	0.70
		ΔT	25	25	24	20	26	25	24	21	26	25	24	21	26	25	24	21	25	25	24	20	24	23	22	19
		kW	1.25	1.28	1.32	1.36	1.35	1.37	1.42	1.46	1.43	1.46	1.50	1.55	1.50	1.53	1.58	1.63	1.56	1.59	1.65	1.70	1.61	1.65	1.70	1.76
		Amps	4.6	4.7	4.9	5.0	5.0	5.1	5.2	5.4	5.4	5.5	5.7	5.9	5.8	5.9	6.1	6.3	6.1	6.3	6.5	6.7	6.5	6.7	6.9	7.2
		Hi PR	211	227	240	250	237	255	269	281	269	290	306	319	307	330	349	364	345	372	392	409	382	411	434	452
		Lo PR	104	110	121	128	110	117	127	136	114	121	132	141	120	127	139	148	126	134	146	155	130	138	151	161

IDB: Entering Indoor Dry Bulb Temperature
High and low pressures are measured at the liquid and suction service valves.

Shaded area reflects ARI conditions

Amps = outdoor unit amps (comp.+fan)
kW = Total system power

EXPANDED COOLING DATA — GSX130241* / CA*F1824*6**

			Outdoor Ambient Temperature																							
			65ºF				75ºF				85ºF				95ºF				105ºF				115ºF			
			Entering Indoor Wet Bulb Temperature																							
IDB	Airflow		59	63	67	71	59	63	67	71	59	63	67	71	59	63	67	71	59	63	67	71	59	63	67	71
70	911	MBh	22.5	23.4	25.6	-	22.0	22.8	25.0	-	21.5	22.3	24.4	-	21.0	21.7	23.8	-	19.9	20.6	22.6	-	18.4	19.1	21.0	-
		S/T	0.73	0.61	0.42	-	0.76	0.63	0.44	-	0.78	0.65	0.45	-	0.80	0.67	0.47	-	0.83	0.70	0.48	-	0.84	0.70	0.49	-
		ΔT	17	14	11	-	17	15	11	-	17	15	11	-	17	15	11	-	17	15	11	-	16	14	10	-
		kW	1.62	1.66	1.70	-	1.74	1.78	1.83	-	1.84	1.88	1.94	-	1.93	1.97	2.03	-	2.01	2.05	2.12	-	2.08	2.12	2.19	-
		Amps	5.7	5.9	6.0	-	6.2	6.3	6.5	-	6.7	6.9	7.1	-	7.2	7.4	7.6	-	7.6	7.8	8.1	-	8.1	8.3	8.6	-
		Hi PR	227	244	258	-	255	274	290	-	290	312	329	-	330	355	375	-	371	400	422	-	410	442	466	-
		Lo PR	101	107	117	-	107	113	124	-	111	118	129	-	116	124	135	-	122	130	142	-	126	134	146	-
	810	MBh	21.9	22.7	24.8	-	21.4	22.2	24.3	-	20.9	21.6	23.7	-	20.4	21.1	23.1	-	19.3	20.0	22.0	-	17.9	18.6	20.3	-
		S/T	0.70	0.58	0.40	-	0.72	0.61	0.42	-	0.74	0.62	0.43	-	0.77	0.64	0.44	-	0.80	0.66	0.46	-	0.80	0.67	0.46	-
		ΔT	17	15	11	-	18	15	12	-	18	15	12	-	18	15	12	-	17	15	11	-	16	14	11	-
		kW	1.61	1.64	1.69	-	1.73	1.76	1.81	-	1.83	1.87	1.92	-	1.92	1.96	2.02	-	1.99	2.04	2.10	-	2.06	2.10	2.17	-
		Amps	5.7	5.8	6.0	-	6.1	6.3	6.5	-	6.7	6.8	7.0	-	7.1	7.3	7.5	-	7.6	7.8	8.0	-	8.0	8.2	8.5	-
		Hi PR	225	242	256	-	252	272	287	-	287	309	326	-	327	352	371	-	368	396	418	-	406	437	462	-
		Lo PR	100	106	116	-	106	112	123	-	110	117	127	-	115	123	134	-	121	128	140	-	125	133	145	-
	709	MBh	20.2	20.9	22.9	-	19.7	20.4	22.4	-	19.3	20.0	21.9	-	18.8	19.5	21.3	-	17.8	18.5	20.3	-	16.5	17.1	18.8	-
		S/T	0.67	0.56	0.39	-	0.70	0.58	0.40	-	0.72	0.60	0.41	-	0.74	0.62	0.43	-	0.77	0.64	0.44	-	0.77	0.65	0.45	-
		ΔT	18	15	12	-	18	15	12	-	18	15	12	-	18	16	12	-	18	15	12	-	17	14	11	-
		kW	1.58	1.61	1.65	-	1.69	1.72	1.77	-	1.79	1.82	1.88	-	1.87	1.91	1.97	-	1.95	1.99	2.05	-	2.01	2.05	2.12	-
		Amps	5.5	5.6	5.8	-	6.0	6.1	6.3	-	6.5	6.6	6.9	-	6.9	7.1	7.3	-	7.4	7.5	7.8	-	7.8	8.0	8.3	-
		Hi PR	218	235	248	-	245	263	278	-	278	300	316	-	317	341	360	-	357	384	405	-	394	424	448	-
		Lo PR	97	103	112	-	102	109	119	-	106	113	124	-	112	119	130	-	117	125	136	-	121	129	141	-
75	911	MBh	22.9	23.6	25.5	27.4	22.4	23.0	24.9	26.8	21.9	22.5	24.4	26.1	21.3	**22.0**	23.8	25.5	20.3	20.9	22.6	24.2	18.8	19.3	20.9	22.4
		S/T	0.83	0.75	0.56	0.36	0.86	0.77	0.58	0.38	0.89	0.79	0.60	0.39	0.91	**0.82**	0.62	0.40	0.95	0.85	0.64	0.41	0.96	0.86	0.65	0.42
		ΔT	19	18	15	10	20	18	15	10	20	18	15	10	20	**18**	15	10	19	18	15	10	18	17	14	9
		kW	1.64	1.67	1.72	1.77	1.75	1.79	1.84	1.90	1.86	1.89	1.95	2.01	1.95	**1.99**	2.05	2.11	2.03	2.07	2.13	2.20	2.09	2.14	2.20	2.27
		Amps	5.8	5.9	6.1	6.3	6.2	6.4	6.6	6.9	6.8	6.9	7.2	7.5	7.3	**7.4**	7.7	8.0	7.7	7.9	8.2	8.5	8.2	8.4	8.7	9.0
		Hi PR	229	247	261	272	257	277	293	305	293	315	333	347	333	**359**	379	395	375	404	426	445	415	446	471	491
		Lo PR	102	108	118	126	108	115	125	133	112	119	130	138	118	**125**	136	145	123	131	143	152	127	136	148	158
	810	MBh	22.3	22.9	24.8	26.6	21.7	22.4	24.2	26.0	21.2	21.8	23.6	25.4	20.7	**21.3**	23.1	24.8	19.7	20.2	21.9	23.5	18.2	18.8	20.3	21.8
		S/T	0.79	0.71	0.54	0.35	0.82	0.74	0.56	0.36	0.84	0.76	0.57	0.37	0.87	**0.78**	0.59	0.38	0.90	0.81	0.61	0.39	0.91	0.82	0.62	0.40
		ΔT	20	18	15	10	20	19	15	11	20	19	15	11	20	**19**	15	11	20	19	15	11	19	17	14	10
		kW	1.62	1.66	1.71	1.76	1.74	1.78	1.83	1.88	1.84	1.88	1.94	2.00	1.93	**1.97**	2.03	2.10	2.01	2.05	2.12	2.18	2.08	2.12	2.19	2.26
		Amps	5.7	5.9	6.1	6.3	6.2	6.3	6.5	6.8	6.7	6.9	7.1	7.4	7.2	**7.4**	7.6	7.9	7.6	7.8	8.1	8.4	8.1	8.3	8.6	8.9
		Hi PR	227	244	258	269	255	274	290	302	290	312	329	344	330	**355**	375	391	371	400	422	440	410	442	466	486
		Lo PR	101	107	117	125	107	113	124	132	111	118	129	137	116	**124**	135	144	122	130	142	151	126	134	146	156
	709	MBh	20.5	21.1	22.9	24.6	20.1	20.7	22.4	24.0	19.6	20.2	21.8	23.4	19.1	**19.7**	21.3	22.9	18.2	18.7	20.2	21.7	16.8	17.3	18.7	20.1
		S/T	0.77	0.69	0.52	0.33	0.79	0.71	0.54	0.35	0.81	0.73	0.55	0.35	0.84	**0.75**	0.57	0.37	0.87	0.78	0.59	0.38	0.88	0.79	0.60	0.38
		ΔT	20	19	15	11	21	19	16	11	21	19	16	11	21	**19**	16	11	21	19	15	11	19	18	14	10
		kW	1.59	1.62	1.67	1.72	1.70	1.74	1.79	1.84	1.80	1.84	1.89	1.95	1.89	**1.93**	1.99	2.05	1.96	2.00	2.07	2.13	2.03	2.07	2.13	2.20
		Amps	5.6	5.7	5.9	6.1	6.0	6.2	6.4	6.6	6.5	6.7	6.9	7.2	7.0	**7.2**	7.4	7.7	7.4	7.6	7.9	8.2	7.9	8.1	8.3	8.7
		Hi PR	220	237	250	261	247	266	281	293	281	303	320	333	320	**345**	364	380	360	388	409	427	398	428	452	472
		Lo PR	98	104	114	121	103	110	120	128	107	114	125	133	113	**120**	131	140	118	126	137	146	122	130	142	151

IDB: Entering Indoor Dry Bulb Temperature
High and low pressures are measured at the liquid and suction service valves.

Shaded area reflects ACCA (TVA) conditions

Amps = outdoor unit amps (comp.+fan)
kW = Total system power

EXPANDED COOLING DATA — GSX130241* / CA*F1824*6** (CONT.)

			Outdoor Ambient Temperature																							
			65ºF				75ºF				85ºF				95ºF				105ºF				115ºF			
			Entering Indoor Wet Bulb Temperature																							
IDB	Airflow		59	63	67	71	59	63	67	71	59	63	67	71	59	63	67	71	59	63	67	71	59	63	67	71
80	911	MBh	23.3	23.8	25.5	27.2	22.8	23.3	24.9	26.6	22.2	22.7	24.3	26.0	21.7	22.2	23.7	25.3	20.6	21.1	22.5	24.1	19.1	19.5	20.8	22.3
		S/T	0.91	0.86	0.70	0.52	0.95	0.89	0.72	0.54	1.00	0.91	0.74	0.55	1.00	0.94	0.77	0.57	1.00	1.00	0.79	0.59	1.00	1.00	0.80	0.60
		ΔT	22	21	18	14	22	21	18	15	22	21	18	15	22	21	18	15	21	21	18	14	19	20	17	13
		kW	1.65	1.68	1.73	1.78	1.77	1.80	1.86	1.91	1.87	1.91	1.97	2.03	1.96	2.00	2.07	2.13	2.04	2.08	2.15	2.22	2.11	2.15	2.22	2.29
		Amps	5.8	6.0	6.2	6.4	6.3	6.5	6.7	6.9	6.8	7.0	7.2	7.5	7.3	7.5	7.8	8.0	7.8	8.0	8.3	8.6	8.3	8.5	8.8	9.1
		Hi PR	232	249	263	275	260	280	296	308	296	318	336	351	337	363	383	399	379	408	431	449	419	451	476	496
		Lo PR	103	109	120	127	109	116	126	134	113	120	131	140	119	126	138	147	124	132	144	154	129	137	149	159
	810	MBh	22.6	23.1	24.7	26.4	22.1	22.6	24.2	25.8	21.6	22.1	23.6	25.2	21.1	21.5	**23.0**	24.6	20.0	20.5	21.9	23.4	18.5	18.9	20.2	21.6
		S/T	0.87	0.82	0.67	0.50	0.90	0.85	0.69	0.52	0.93	0.87	0.71	0.53	0.96	0.90	**0.73**	0.55	0.99	0.93	0.76	0.57	1.00	0.94	0.76	0.57
		ΔT	22	21	19	15	23	22	19	15	23	22	19	15	23	22	**19**	15	23	22	19	15	21	20	18	14
		kW	1.64	1.67	1.72	1.77	1.75	1.79	1.84	1.90	1.86	1.89	1.95	2.01	1.95	1.99	**2.05**	2.11	2.03	2.07	2.13	2.20	2.09	2.14	2.20	2.27
		Amps	5.8	5.9	6.1	6.3	6.2	6.4	6.6	6.9	6.8	6.9	7.2	7.5	7.3	7.4	**7.7**	8.0	7.7	7.9	8.2	8.5	8.2	8.4	8.7	9.0
		Hi PR	229	247	261	272	257	277	293	305	293	315	333	347	334	359	**379**	395	375	404	426	445	415	446	471	491
		Lo PR	102	108	118	126	108	115	125	133	112	119	130	138	118	125	**137**	145	123	131	143	152	127	136	148	158
	709	MBh	20.9	21.4	22.8	24.4	20.4	20.9	22.3	23.8	19.9	20.4	21.8	23.3	19.4	19.9	21.2	22.7	18.5	18.9	20.2	21.6	17.1	17.5	18.7	20.0
		S/T	0.84	0.79	0.64	0.48	0.87	0.82	0.67	0.50	0.89	0.84	0.68	0.51	0.92	0.86	0.70	0.53	0.96	0.90	0.73	0.55	0.97	0.91	0.74	0.55
		ΔT	23	22	19	15	23	22	19	15	23	22	19	15	23	22	19	15	23	22	19	15	21	21	18	14
		kW	1.60	1.63	1.68	1.73	1.71	1.75	1.80	1.86	1.81	1.85	1.91	1.97	1.90	1.94	2.00	2.06	1.98	2.02	2.08	2.15	2.04	2.09	2.15	2.22
		Amps	5.6	5.8	5.9	6.2	6.1	6.2	6.4	6.7	6.6	6.8	7.0	7.2	7.1	7.2	7.5	7.7	7.5	7.7	7.9	8.3	8.0	8.2	8.4	8.7
		Hi PR	223	240	253	264	250	269	284	296	284	306	323	337	324	348	368	383	364	392	414	431	402	433	457	477
		Lo PR	99	105	115	122	104	111	121	129	109	115	126	134	114	121	132	141	119	127	139	148	124	131	144	153
85	911	MBh	23.7	24.2	25.3	27.0	23.2	23.6	24.8	26.4	22.6	23.1	24.2	25.8	22.1	22.5	23.6	25.1	21.0	21.4	22.4	23.9	19.4	19.8	20.7	22.1
		S/T	0.96	0.92	0.83	0.68	0.99	0.96	0.86	0.70	1.00	0.98	0.89	0.72	1.00	1.00	0.92	0.74	1.00	1.00	0.95	0.77	1.00	1.00	0.96	0.78
		ΔT	23	23	21	18	23	23	22	19	23	23	22	19	22	23	22	19	21	22	21	19	20	20	20	17
		kW	1.66	1.69	1.74	1.80	1.78	1.82	1.87	1.93	1.89	1.92	1.98	2.05	1.98	2.02	2.08	2.15	2.06	2.10	2.17	2.24	2.13	2.17	2.24	2.31
		Amps	5.9	6.0	6.2	6.4	6.4	6.5	6.7	7.0	6.9	7.1	7.3	7.6	7.4	7.6	7.8	8.1	7.9	8.1	8.3	8.7	8.3	8.5	8.8	9.2
		Hi PR	234	252	266	277	263	283	298	311	299	321	339	354	340	366	387	403	383	412	435	454	423	455	481	501
		Lo PR	104	111	121	129	110	117	128	136	114	121	133	141	120	128	139	148	126	134	146	155	130	138	151	161
	810	MBh	23.0	23.5	24.6	26.2	22.5	22.9	24.0	25.6	22.0	22.4	23.5	25.0	21.4	21.9	22.9	24.4	20.4	20.8	21.7	23.2	18.9	19.2	20.1	21.5
		S/T	0.91	0.88	0.80	0.65	0.95	0.91	0.82	0.67	0.97	0.94	0.85	0.69	1.00	0.97	0.87	0.71	1.00	1.00	0.91	0.74	1.00	1.00	0.91	0.74
		ΔT	24	24	22	19	24	24	22	19	24	24	23	19	24	24	23	20	23	24	22	19	21	22	21	18
		kW	1.65	1.68	1.73	1.78	1.77	1.80	1.86	1.91	1.87	1.91	1.97	2.03	1.96	2.00	2.07	2.13	2.04	2.08	2.15	2.22	2.11	2.15	2.22	2.29
		Amps	5.8	6.0	6.2	6.4	6.3	6.5	6.7	6.9	6.8	7.0	7.2	7.5	7.3	7.5	7.8	8.0	7.8	8.0	8.3	8.6	8.3	8.5	8.8	9.1
		Hi PR	232	249	263	275	260	280	296	308	296	318	336	351	337	363	383	399	379	408	431	449	419	451	476	496
		Lo PR	103	109	120	127	109	116	126	134	113	120	131	140	119	126	138	147	124	132	144	154	129	137	149	159
	709	MBh	21.3	21.7	22.7	24.2	20.8	21.2	22.2	23.7	20.3	20.7	21.7	23.1	19.8	20.2	21.1	22.5	18.8	19.2	20.1	21.4	17.4	17.7	18.6	19.8
		S/T	0.88	0.85	0.77	0.62	0.91	0.88	0.80	0.65	0.94	0.90	0.82	0.66	0.97	0.93	0.84	0.68	1.00	0.97	0.87	0.71	1.00	0.98	0.88	0.71
		ΔT	24	24	23	20	25	24	23	20	25	24	23	20	25	24	23	20	24	24	23	20	23	22	21	18
		kW	1.61	1.64	1.69	1.74	1.73	1.76	1.81	1.87	1.83	1.87	1.92	1.98	1.92	1.96	2.02	2.08	1.99	2.03	2.10	2.16	2.06	2.10	2.17	2.24
		Amps	5.7	5.8	6.0	6.2	6.1	6.3	6.5	6.7	6.7	6.8	7.0	7.3	7.1	7.3	7.5	7.8	7.6	7.8	8.0	8.3	8.0	8.2	8.5	8.8
		Hi PR	225	242	255	266	252	271	287	299	287	309	326	340	327	352	371	387	368	396	418	436	406	437	462	481
		Lo PR	100	106	116	123	105	112	122	130	110	117	127	136	115	122	134	142	121	128	140	149	125	133	145	154

IDB: Entering Indoor Dry Bulb Temperature
High and low pressures are measured at the liquid and suction service valves.

Shaded area reflects ARI conditions

Amps = outdoor unit amps (comp.+fan)
kW = Total system power

EXPANDED COOLING DATA — GSX130301A* / CA*F3030*6**

IDB	Airflow		Outdoor Ambient Temperature 65ºF				75ºF				85ºF				95ºF				105ºF				115ºF			
			Entering Indoor Wet Bulb Temperature																							
			59	63	67	71	59	63	67	71	59	63	67	71	59	63	67	71	59	63	67	71	59	63	67	71
70	1181	MBh	27.8	28.8	31.6	-	27.2	28.2	30.9	-	26.5	27.5	30.1	-	25.9	26.8	29.4	-	24.6	25.5	27.9	-	22.8	23.6	25.9	-
		S/T	0.74	0.62	0.43	-	0.77	0.64	0.45	-	0.79	0.66	0.46	-	0.82	0.68	0.47	-	0.85	0.71	0.49	-	0.85	0.71	0.49	-
		ΔT	16	14	11	-	16	14	11	-	16	14	11	-	16	14	11	-	16	14	11	-	15	13	10	-
		kW	1.99	2.03	2.08	-	2.13	2.17	2.24	-	2.25	2.30	2.37	-	2.37	2.41	2.49	-	2.46	2.51	2.59	-	2.54	2.60	2.68	-
		Amps	7.0	7.1	7.4	-	7.6	7.7	8.0	-	8.2	8.4	8.7	-	8.8	9.0	9.3	-	9.4	9.6	9.9	-	9.9	10.2	10.5	-
		Hi PR	240	258	272	-	269	289	306	-	306	329	348	-	348	375	396	-	392	422	445	-	433	466	492	-
		Lo PR	107	114	124	-	113	120	131	-	117	125	136	-	123	131	143	-	129	137	150	-	133	142	155	-
	1050	MBh	27.0	28.0	30.7	-	26.4	27.4	30.0	-	25.8	26.7	29.3	-	25.1	26.1	28.5	-	23.9	24.7	27.1	-	22.1	22.9	25.1	-
		S/T	0.71	0.59	0.41	-	0.73	0.61	0.43	-	0.75	0.63	0.44	-	0.78	0.65	0.45	-	0.81	0.67	0.47	-	0.81	0.68	0.47	-
		ΔT	17	15	11	-	17	15	11	-	17	15	11	-	17	15	11	-	17	15	11	-	16	14	10	-
		kW	1.97	2.01	2.07	-	2.11	2.16	2.22	-	2.24	2.28	2.35	-	2.35	2.40	2.47	-	2.44	2.49	2.57	-	2.52	2.57	2.66	-
		Amps	6.9	7.1	7.3	-	7.5	7.7	7.9	-	8.1	8.3	8.6	-	8.7	8.9	9.2	-	9.3	9.5	9.8	-	9.8	10.1	10.4	-
		Hi PR	237	255	270	-	266	287	303	-	303	326	344	-	345	371	392	-	388	418	441	-	429	461	487	-
		Lo PR	106	112	123	-	112	119	130	-	116	123	135	-	122	130	142	-	128	136	148	-	132	141	154	-
	919	MBh	24.9	25.8	28.3	-	24.4	25.2	27.7	-	23.8	24.6	27.0	-	23.2	24.0	26.3	-	22.0	22.8	25.0	-	20.4	21.2	23.2	-
		S/T	0.68	0.57	0.40	-	0.71	0.59	0.41	-	0.73	0.61	0.42	-	0.75	0.63	0.43	-	0.78	0.65	0.45	-	0.78	0.66	0.45	-
		ΔT	17	15	11	-	17	15	11	-	17	15	11	-	17	15	11	-	17	15	11	-	16	14	11	-
		kW	1.93	1.97	2.02	-	2.06	2.11	2.17	-	2.19	2.23	2.30	-	2.29	2.34	2.41	-	2.38	2.43	2.51	-	2.46	2.51	2.59	-
		Amps	6.7	6.9	7.1	-	7.3	7.5	7.7	-	7.9	8.1	8.4	-	8.5	8.7	9.0	-	9.0	9.2	9.6	-	9.6	9.8	10.1	-
		Hi PR	230	248	262	-	258	278	294	-	294	316	334	-	335	360	380	-	376	405	428	-	416	448	473	-
		Lo PR	103	109	119	-	108	115	126	-	113	120	131	-	118	126	137	-	124	132	144	-	128	136	149	-
75	1181	MBh	28.3	29.1	31.5	33.9	27.6	28.5	30.8	33.1	27.0	27.8	30.1	32.3	26.3	**27.1**	29.3	31.5	25.0	25.8	27.9	29.9	23.2	23.9	25.8	27.7
		S/T	0.84	0.76	0.57	0.37	0.88	0.78	0.59	0.38	0.90	0.80	0.61	0.39	0.93	**0.83**	0.63	0.40	0.96	0.86	0.65	0.42	0.97	0.87	0.66	0.42
		ΔT	19	17	14	10	19	17	14	10	19	17	14	10	19	**17**	14	10	19	17	14	10	17	16	13	9
		kW	2.00	2.04	2.10	2.16	2.14	2.19	2.25	2.32	2.27	2.32	2.39	2.47	2.38	**2.43**	2.51	2.59	2.48	2.53	2.61	2.70	2.56	2.62	2.70	2.79
		Amps	7.0	7.2	7.5	7.7	7.6	7.8	8.1	8.4	8.3	8.5	8.8	9.1	8.9	**9.1**	9.4	9.8	9.5	9.7	10.0	10.4	10.0	10.3	10.6	11.0
		Hi PR	242	261	275	287	272	292	309	322	309	333	351	366	352	**379**	400	417	396	426	450	469	437	471	497	519
		Lo PR	108	115	125	133	114	121	132	141	118	126	138	146	124	**132**	144	154	130	139	151	161	135	143	157	167
	1050	MBh	27.5	28.3	30.6	32.9	26.8	27.6	29.9	32.1	26.2	27.0	29.2	31.3	25.6	**26.3**	28.5	30.6	24.3	25.0	27.1	29.0	22.5	23.2	25.1	26.9
		S/T	0.81	0.72	0.55	0.35	0.84	0.75	0.57	0.36	0.86	0.77	0.58	0.37	0.88	**0.79**	0.60	0.38	0.92	0.82	0.62	0.40	0.93	0.83	0.63	0.40
		ΔT	19	18	15	10	20	18	15	10	20	18	15	10	20	**18**	15	10	20	18	15	10	18	17	14	9
		kW	1.99	2.03	2.09	2.15	2.13	2.17	2.24	2.31	2.25	2.30	2.37	2.45	2.37	**2.41**	2.49	2.57	2.46	2.51	2.59	2.67	2.54	2.60	2.68	2.76
		Amps	7.0	7.1	7.4	7.7	7.6	7.7	8.0	8.3	8.2	8.4	8.7	9.0	8.8	**9.0**	9.3	9.7	9.4	9.6	9.9	10.3	9.9	10.2	10.5	10.9
		Hi PR	240	258	272	284	269	290	306	319	306	329	348	363	348	**375**	396	413	392	422	446	465	433	466	492	513
		Lo PR	107	114	124	132	113	120	131	140	117	125	136	145	123	**131**	143	152	129	137	150	160	134	142	155	165
	919	MBh	25.4	26.1	28.3	30.3	24.8	25.5	27.6	29.6	24.2	24.9	26.9	28.9	23.6	**24.3**	26.3	28.2	22.4	23.1	25.0	26.8	20.8	21.4	23.1	24.8
		S/T	0.78	0.69	0.53	0.34	0.81	0.72	0.55	0.35	0.83	0.74	0.56	0.36	0.85	**0.76**	0.58	0.37	0.88	0.79	0.60	0.39	0.89	0.80	0.60	0.39
		ΔT	20	18	15	10	20	18	15	10	20	18	15	10	20	**19**	15	10	20	18	15	10	19	17	14	10
		kW	1.94	1.98	2.04	2.10	2.08	2.12	2.19	2.25	2.20	2.25	2.32	2.39	2.31	**2.36**	2.43	2.51	2.40	2.45	2.53	2.61	2.48	2.53	2.61	2.70
		Amps	6.8	7.0	7.2	7.5	7.3	7.5	7.8	8.1	8.0	8.2	8.5	8.8	8.5	**8.8**	9.1	9.4	9.1	9.3	9.6	10.0	9.6	9.9	10.2	10.6
		Hi PR	233	250	264	276	261	281	297	309	297	319	337	352	338	**364**	384	401	380	409	432	451	420	452	477	498
		Lo PR	104	110	120	128	109	116	127	135	114	121	132	141	119	**127**	139	148	125	133	145	155	130	138	150	160

IDB: Entering Indoor Dry Bulb Temperature
High and low pressures are measured at the liquid and suction service valves.

Shaded area reflects ACCA (TVA) conditions

Amps = outdoor unit amps (comp.+fan)
kW = Total system power

EXPANDED COOLING DATA — GSX130301A* / CA*F3030*6** (CONT.)

			Outdoor Ambient Temperature																							
			65ºF				75ºF				85ºF				95ºF				105ºF				115ºF			
			Entering Indoor Wet Bulb Temperature																							
IDB	Airflow		59	63	67	71	59	63	67	71	59	63	67	71	59	63	67	71	59	63	67	71	59	63	67	71
80	1181	MBh	28.8	29.4	31.4	33.6	28.1	28.7	30.7	32.8	27.5	28.1	30.0	32.1	26.8	27.4	29.3	31.3	25.5	26.0	27.8	29.7	23.6	24.1	25.7	27.5
		S/T	0.93	0.87	0.71	0.53	0.96	0.90	0.73	0.55	1.00	0.92	0.75	0.56	1.00	0.95	0.78	0.58	1.00	1.00	0.81	0.60	1.00	1.00	0.81	0.61
		ΔT	21	20	17	14	21	20	18	14	21	20	18	14	21	20	18	14	20	20	17	14	18	19	16	13
		kW	2.02	2.06	2.12	2.18	2.16	2.21	2.27	2.34	2.29	2.34	2.41	2.48	2.40	2.45	2.53	2.61	2.50	2.55	2.63	2.72	2.58	2.64	2.72	2.81
		Amps	7.1	7.3	7.5	7.8	7.7	7.9	8.1	8.5	8.4	8.6	8.9	9.2	9.0	9.2	9.5	9.9	9.5	9.8	10.1	10.5	10.1	10.4	10.7	11.1
		Hi PR	245	263	278	290	274	295	312	325	312	336	355	370	356	383	404	421	400	430	455	474	442	476	502	524
		Lo PR	109	116	127	135	115	122	134	142	120	127	139	148	126	134	146	155	132	140	153	163	136	145	158	168
	1050	MBh	28.0	28.6	30.5	32.6	27.3	27.9	29.8	31.9	26.7	27.2	29.1	31.1	26.0	26.6	**28.4**	30.4	24.7	25.3	27.0	28.8	22.9	23.4	25.0	26.7
		S/T	0.88	0.83	0.67	0.50	0.92	0.86	0.70	0.52	0.94	0.88	0.72	0.54	0.97	0.91	**0.74**	0.55	1.00	0.94	0.77	0.57	1.00	0.95	0.77	0.58
		ΔT	22	21	18	14	22	21	18	15	22	21	18	15	22	21	**18**	15	22	21	18	14	20	19	17	14
		kW	2.00	2.04	2.10	2.16	2.15	2.19	2.25	2.32	2.27	2.32	2.39	2.47	2.38	2.43	**2.51**	2.59	2.48	2.53	2.61	2.70	2.56	2.62	2.70	2.79
		Amps	7.0	7.2	7.5	7.7	7.6	7.8	8.1	8.4	8.3	8.5	8.8	9.1	8.9	9.1	**9.4**	9.8	9.5	9.7	10.0	10.4	10.0	10.3	10.6	11.0
		Hi PR	242	261	275	287	272	292	309	322	309	333	351	366	352	379	**400**	417	396	426	450	469	438	471	497	519
		Lo PR	108	115	125	133	114	121	132	141	118	126	138	147	124	132	**145**	154	130	139	151	161	135	143	157	167
	919	MBh	25.8	26.4	28.2	30.1	25.2	25.8	27.5	29.4	24.6	25.1	26.9	28.7	24.0	24.5	26.2	28.0	22.8	23.3	24.9	26.6	21.1	21.6	23.1	24.7
		S/T	0.85	0.80	0.65	0.49	0.88	0.83	0.67	0.50	0.91	0.85	0.69	0.52	0.93	0.88	0.71	0.53	0.97	0.91	0.74	0.55	0.98	0.92	0.75	0.56
		ΔT	22	21	18	15	22	21	19	15	22	21	19	15	22	22	19	15	22	21	18	15	21	20	17	14
		kW	1.96	1.99	2.05	2.11	2.10	2.14	2.20	2.27	2.22	2.26	2.33	2.41	2.33	2.38	2.45	2.53	2.42	2.47	2.55	2.63	2.50	2.55	2.63	2.72
		Amps	6.9	7.0	7.2	7.5	7.4	7.6	7.8	8.1	8.1	8.3	8.5	8.9	8.6	8.8	9.1	9.5	9.2	9.4	9.7	10.1	9.7	10.0	10.3	10.7
		Hi PR	235	253	267	278	264	284	300	312	300	323	341	355	341	367	388	405	384	413	437	455	424	457	482	503
		Lo PR	105	111	122	129	111	118	128	137	115	122	133	142	121	128	140	149	126	135	147	156	131	139	152	162
85	1181	MBh	29.3	29.9	31.3	33.4	28.6	29.2	30.6	32.6	27.9	28.5	29.8	31.8	27.3	27.8	29.1	31.1	25.9	26.4	27.7	29.5	24.0	24.5	25.6	27.3
		S/T	0.97	0.94	0.85	0.69	1.00	0.97	0.88	0.71	1.00	1.00	0.90	0.73	1.00	1.00	0.93	0.75	1.00	1.00	0.96	0.78	1.00	1.00	0.97	0.79
		ΔT	22	22	21	18	22	22	21	18	22	22	21	18	21	22	21	18	20	21	21	18	19	19	19	17
		kW	2.03	2.07	2.13	2.20	2.18	2.22	2.29	2.36	2.31	2.36	2.43	2.50	2.42	2.47	2.55	2.63	2.52	2.57	2.65	2.74	2.60	2.66	2.74	2.83
		Amps	7.2	7.3	7.6	7.9	7.8	8.0	8.2	8.5	8.4	8.7	8.9	9.3	9.0	9.3	9.6	9.9	9.6	9.9	10.2	10.6	10.2	10.5	10.8	11.2
		Hi PR	247	266	281	293	277	298	315	329	315	339	358	374	359	386	408	426	404	435	459	479	446	480	507	529
		Lo PR	110	117	128	136	116	124	135	144	121	129	140	149	127	135	147	157	133	142	154	165	138	146	160	170
	1050	MBh	28.5	29.0	30.4	32.4	27.8	28.3	29.7	31.7	27.1	27.7	29.0	30.9	26.5	27.0	28.3	30.1	25.1	25.6	26.8	28.6	23.3	23.7	24.9	26.5
		S/T	0.93	0.89	0.81	0.65	0.96	0.93	0.84	0.68	0.98	0.95	0.86	0.70	1.00	0.98	0.89	0.72	1.00	1.00	0.92	0.75	1.00	1.00	0.93	0.75
		ΔT	23	23	21	19	23	23	22	19	23	23	22	19	23	23	22	19	22	22	22	19	20	21	20	17
		kW	2.02	2.06	2.12	2.18	2.16	2.21	2.27	2.34	2.29	2.34	2.41	2.48	2.40	2.45	2.53	2.61	2.50	2.55	2.63	2.72	2.58	2.64	2.72	2.81
		Amps	7.1	7.3	7.5	7.8	7.7	7.9	8.1	8.5	8.4	8.6	8.9	9.2	9.0	9.2	9.5	9.9	9.5	9.8	10.1	10.5	10.1	10.4	10.7	11.1
		Hi PR	245	263	278	290	274	295	312	325	312	336	355	370	356	383	404	421	400	430	455	474	442	476	502	524
		Lo PR	109	116	127	135	115	122	134	142	120	127	139	148	126	134	146	155	132	140	153	163	136	145	158	168
	919	MBh	26.3	26.8	28.0	29.9	25.7	26.1	27.4	29.2	25.0	25.5	26.7	28.5	24.4	24.9	26.1	27.8	23.2	23.7	24.8	26.4	21.5	21.9	23.0	24.5
		S/T	0.89	0.86	0.78	0.63	0.93	0.89	0.81	0.65	0.95	0.92	0.83	0.67	0.98	0.95	0.85	0.69	1.00	0.98	0.89	0.72	1.00	0.99	0.89	0.72
		ΔT	23	23	22	19	24	23	22	19	24	23	22	19	24	24	22	19	23	23	22	19	22	22	21	18
		kW	1.97	2.01	2.07	2.13	2.11	2.15	2.22	2.29	2.24	2.28	2.35	2.43	2.35	2.40	2.47	2.55	2.44	2.49	2.57	2.65	2.52	2.57	2.66	2.74
		Amps	6.9	7.1	7.3	7.6	7.5	7.7	7.9	8.2	8.1	8.3	8.6	8.9	8.7	8.9	9.2	9.6	9.3	9.5	9.8	10.2	9.8	10.1	10.4	10.8
		Hi PR	237	255	270	281	266	286	303	316	303	326	344	359	345	371	392	409	388	417	441	460	429	461	487	508
		Lo PR	106	112	123	131	112	119	130	138	116	123	135	144	122	130	142	151	128	136	148	158	132	141	153	163

IDB: Entering Indoor Dry Bulb Temperature
High and low pressures are measured at the liquid and suction service valves.

Shaded area reflects ARI conditions

Amps = outdoor unit amps (comp.+fan)
kW = Total system power

EXPANDED COOLING DATA — GSX130301B* / CA*F3030*6B*

			Outdoor Ambient Temperature																							
			65ºF				75ºF				85ºF				95ºF				105ºF				115ºF			
			Entering Indoor Wet Bulb Temperature																							
IDB	Airflow		59	63	67	71	59	63	67	71	59	63	67	71	59	63	67	71	59	63	67	71	59	63	67	71
70	875	MBh	24.9	25.8	28.3	-	24.4	25.2	27.7	-	23.8	24.6	27.0	-	23.2	24.0	26.3	-	22.0	22.8	25.0	-	20.4	21.2	23.2	-
		S/T	0.69	0.58	0.40	-	0.72	0.60	0.42	-	0.74	0.61	0.43	-	0.76	0.63	0.44	-	0.79	0.66	0.46	-	0.80	0.66	0.46	-
		ΔT	18	16	12	-	18	16	12	-	18	16	12	-	19	16	12	-	18	16	12	-	17	15	11	-
		kW	1.94	1.98	2.03	-	2.08	2.12	2.18	-	2.20	2.25	2.32	-	2.31	2.36	2.43	-	2.40	2.45	2.53	-	2.48	2.54	2.62	-
		Amps	6.8	7.0	7.2	-	7.4	7.6	7.8	-	8.0	8.2	8.5	-	8.6	8.8	9.1	-	9.1	9.3	9.7	-	9.7	9.9	10.2	-
		Hi PR	228	245	259	-	256	275	291	-	291	313	331	-	332	357	377	-	373	401	424	-	412	443	468	-
		Lo PR	102	109	119	-	108	115	125	-	112	119	130	-	118	125	137	-	124	131	143	-	128	136	148	-
	1000	MBh	27.0	28.0	30.7	-	26.4	27.4	30.0	-	25.8	26.7	29.3	-	25.1	26.1	28.5	-	23.9	24.7	27.1	-	22.1	22.9	25.1	-
		S/T	0.72	0.60	0.42	-	0.74	0.62	0.43	-	0.76	0.64	0.44	-	0.79	0.66	0.46	-	0.82	0.68	0.47	-	0.82	0.69	0.48	-
		ΔT	18	15	12	-	18	16	12	-	18	16	12	-	18	16	12	-	18	16	12	-	17	15	11	-
		kW	1.98	2.02	2.08	-	2.13	2.17	2.24	-	2.25	2.30	2.37	-	2.37	2.42	2.49	-	2.46	2.51	2.59	-	2.54	2.60	2.68	-
		Amps	7.0	7.2	7.4	-	7.6	7.8	8.0	-	8.2	8.4	8.7	-	8.8	9.0	9.3	-	9.4	9.6	9.9	-	9.9	10.2	10.5	-
		Hi PR	235	253	267	-	264	284	300	-	300	323	341	-	342	368	388	-	384	414	437	-	425	457	483	-
		Lo PR	105	112	122	-	111	118	129	-	116	123	134	-	122	129	141	-	127	135	148	-	132	140	153	-
	1125	MBh	27.8	28.8	31.6	-	27.2	28.2	30.9	-	26.5	27.5	30.1	-	25.9	26.8	29.4	-	24.6	25.5	27.9	-	22.8	23.6	25.9	-
		S/T	0.75	0.63	0.44	-	0.78	0.65	0.45	-	0.80	0.67	0.46	-	0.83	0.69	0.48	-	0.86	0.72	0.50	-	0.86	0.72	0.50	-
		ΔT	17	15	11	-	17	15	11	-	17	15	11	-	17	15	11	-	17	15	11	-	16	14	11	-
		kW	2.00	2.04	2.10	-	2.14	2.19	2.25	-	2.27	2.32	2.39	-	2.39	2.44	2.51	-	2.48	2.53	2.62	-	2.56	2.62	2.70	-
		Amps	7.1	7.2	7.5	-	7.7	7.8	8.1	-	8.3	8.5	8.8	-	8.9	9.1	9.4	-	9.5	9.7	10.0	-	10.0	10.3	10.6	-
		Hi PR	237	256	270	-	266	287	303	-	303	326	344	-	345	371	392	-	388	418	441	-	429	462	488	-
		Lo PR	106	113	124	-	112	120	131	-	117	124	136	-	123	131	143	-	129	137	149	-	133	142	155	-
75	875	MBh	25.4	26.1	28.3	30.3	24.8	25.5	27.6	29.6	24.2	24.9	26.9	28.9	23.6	**24.3**	26.3	28.2	22.4	23.1	25.0	26.8	20.8	21.4	23.1	24.8
		S/T	0.79	0.70	0.53	0.34	0.82	0.73	0.55	0.36	0.84	0.75	0.57	0.36	0.86	**0.77**	0.58	0.38	0.90	0.80	0.61	0.39	0.90	0.81	0.61	0.39
		ΔT	21	19	16	11	21	20	16	11	21	20	16	11	21	**20**	16	11	21	19	16	11	20	18	15	10
		kW	1.95	1.99	2.05	2.11	2.09	2.14	2.20	2.27	2.22	2.26	2.33	2.41	2.33	**2.38**	2.45	2.53	2.42	2.47	2.55	2.63	2.50	2.56	2.64	2.72
		Amps	6.9	7.1	7.3	7.6	7.4	7.6	7.9	8.2	8.1	8.3	8.6	8.9	8.6	**8.9**	9.2	9.5	9.2	9.4	9.7	10.1	9.7	10.0	10.3	10.7
		Hi PR	230	248	262	273	259	278	294	306	294	316	334	349	335	**360**	381	397	377	405	428	447	416	448	473	493
		Lo PR	103	110	120	128	109	116	127	135	113	121	132	140	119	**127**	138	147	125	133	145	154	129	137	150	160
	1000	MBh	27.5	28.3	30.6	32.9	26.8	27.6	29.9	32.1	26.2	27.0	29.2	31.3	25.6	**26.3**	28.5	30.6	24.3	25.0	27.1	29.0	22.5	23.2	25.1	26.9
		S/T	0.82	0.73	0.55	0.36	0.85	0.76	0.57	0.37	0.87	0.78	0.59	0.38	0.90	**0.80**	0.61	0.39	0.93	0.83	0.63	0.40	0.94	0.84	0.63	0.41
		ΔT	21	19	16	11	21	19	16	11	21	19	16	11	21	**19**	16	11	21	19	16	11	19	18	15	10
		kW	2.00	2.04	2.10	2.16	2.14	2.19	2.25	2.32	2.27	2.32	2.39	2.47	2.39	**2.44**	2.51	2.59	2.48	2.53	2.62	2.70	2.57	2.62	2.70	2.79
		Amps	7.1	7.2	7.5	7.8	7.7	7.8	8.1	8.4	8.3	8.5	8.8	9.1	8.9	**9.1**	9.4	9.8	9.5	9.7	10.0	10.4	10.0	10.3	10.6	11.0
		Hi PR	238	256	270	282	267	287	303	316	303	326	344	359	345	**372**	392	409	388	418	441	460	429	462	488	509
		Lo PR	106	113	124	132	112	120	131	139	117	124	136	145	123	**131**	143	152	129	137	149	159	133	142	155	165
	1125	MBh	28.3	29.1	31.5	33.9	27.6	28.5	30.8	33.1	27.0	27.8	30.1	32.3	26.3	**27.1**	29.3	31.5	25.0	25.8	27.9	29.9	23.2	23.9	25.8	27.7
		S/T	0.86	0.77	0.58	0.37	0.89	0.79	0.60	0.39	0.91	0.81	0.62	0.40	0.94	**0.84**	0.64	0.41	0.97	0.87	0.66	0.42	0.98	0.88	0.67	0.43
		ΔT	20	18	15	10	20	18	15	10	20	18	15	10	20	**19**	15	11	20	18	15	10	19	17	14	10
		kW	2.01	2.05	2.11	2.18	2.16	2.20	2.27	2.34	2.29	2.34	2.41	2.49	2.40	**2.46**	2.53	2.61	2.50	2.56	2.64	2.72	2.59	2.64	2.73	2.82
		Amps	7.1	7.3	7.6	7.8	7.7	7.9	8.2	8.5	8.4	8.6	8.9	9.2	9.0	**9.2**	9.5	9.9	9.6	9.8	10.1	10.5	10.1	10.4	10.7	11.1
		Hi PR	240	258	273	284	269	290	306	319	306	329	348	363	349	**375**	396	413	392	422	446	465	433	466	493	514
		Lo PR	107	114	125	133	114	121	132	140	118	126	137	146	124	**132**	144	153	130	138	151	161	134	143	156	166

IDB: Entering Indoor Dry Bulb Temperature
High and low pressures are measured at the liquid and suction service valves.

Shaded area reflects ACCA (TVA) conditions

Amps = outdoor unit amps (comp.+fan)
kW = Total system power

EXPANDED COOLING DATA — GSX130301B* / CA*F3030*6B* (CONT.)

			Outdoor Ambient Temperature																							
			65ºF				75ºF				85ºF				95ºF				105ºF				115ºF			
			Entering Indoor Wet Bulb Temperature																							
IDB	Airflow		59	63	67	71	59	63	67	71	59	63	67	71	59	63	67	71	59	63	67	71	59	63	67	71
80	875	MBh	25.8	26.4	28.2	30.1	25.2	25.8	27.5	29.4	24.6	25.1	26.9	28.7	24.0	24.5	26.2	28.0	22.8	23.3	24.9	26.6	21.1	21.6	23.1	24.7
		S/T	0.86	0.81	0.66	0.49	0.90	0.84	0.68	0.51	0.92	0.86	0.70	0.52	0.95	0.89	0.72	0.54	0.98	0.92	0.75	0.56	0.99	0.93	0.76	0.57
		ΔT	23	22	20	16	24	23	20	16	24	23	20	16	24	23	20	16	24	23	20	16	22	21	18	15
		kW	1.97	2.01	2.07	2.13	2.11	2.15	2.22	2.29	2.24	2.28	2.35	2.43	2.35	2.40	2.47	2.55	2.44	2.49	2.57	2.66	2.52	2.58	2.66	2.75
		Amps	7.0	7.1	7.3	7.6	7.5	7.7	7.9	8.2	8.2	8.4	8.6	9.0	8.7	8.9	9.2	9.6	9.3	9.5	9.8	10.2	9.8	10.1	10.4	10.8
		Hi PR	233	250	264	276	261	281	297	310	297	320	338	352	338	364	384	401	381	410	432	451	420	452	478	498
		Lo PR	104	111	121	129	110	117	128	136	114	122	133	142	120	128	140	149	126	134	146	156	130	139	151	161
	1000	MBh	28.0	28.6	30.5	32.6	27.3	27.9	29.8	31.9	26.7	27.2	29.1	31.1	26.0	26.6	**28.4**	30.4	24.7	25.3	27.0	28.8	22.9	23.4	25.0	26.7
		S/T	0.90	0.84	0.68	0.51	0.93	0.87	0.71	0.53	0.95	0.89	0.73	0.54	0.98	0.92	**0.75**	0.56	1.00	0.96	0.78	0.58	1.00	0.96	0.78	0.59
		ΔT	23	22	19	15	23	22	19	16	23	22	19	16	23	23	**20**	16	23	22	19	15	21	21	18	14
		kW	2.01	2.05	2.12	2.18	2.16	2.20	2.27	2.34	2.29	2.34	2.41	2.49	2.40	2.46	**2.53**	2.61	2.50	2.56	2.64	2.72	2.59	2.64	2.73	2.82
		Amps	7.1	7.3	7.6	7.8	7.7	7.9	8.2	8.5	8.4	8.6	8.9	9.2	9.0	9.2	**9.5**	9.9	9.6	9.8	10.1	10.5	10.1	10.4	10.7	11.1
		Hi PR	240	258	273	284	269	290	306	319	306	330	348	363	349	375	**396**	413	392	422	446	465	433	466	493	514
		Lo PR	107	114	125	133	114	121	132	140	118	126	137	146	124	132	**144**	153	130	138	151	161	134	143	156	166
	1125	MBh	28.8	29.4	31.4	33.6	28.1	28.7	30.7	32.8	27.5	28.1	30.0	32.1	26.8	27.4	29.3	31.3	25.5	26.0	27.8	29.7	23.6	24.1	25.7	27.5
		S/T	0.94	0.88	0.72	0.54	1.00	0.91	0.74	0.56	1.00	0.94	0.76	0.57	1.00	0.97	0.79	0.59	1.00	1.00	0.82	0.61	1.00	1.00	0.82	0.62
		ΔT	22	21	18	15	23	21	19	15	22	21	19	15	22	22	19	15	21	21	19	15	19	20	17	14
		kW	2.03	2.07	2.13	2.20	2.18	2.22	2.29	2.36	2.31	2.36	2.43	2.51	2.42	2.48	2.55	2.64	2.52	2.58	2.66	2.74	2.61	2.66	2.75	2.84
		Amps	7.2	7.4	7.6	7.9	7.8	8.0	8.2	8.6	8.5	8.7	9.0	9.3	9.1	9.3	9.6	10.0	9.6	9.9	10.2	10.6	10.2	10.5	10.8	11.2
		Hi PR	242	261	275	287	272	293	309	322	309	333	351	367	352	379	400	417	396	426	450	470	438	471	498	519
		Lo PR	109	116	126	134	115	122	133	142	119	127	138	147	125	133	145	155	131	140	152	162	136	144	158	168
85	875	MBh	26.3	26.8	28.0	29.9	25.7	26.1	27.4	29.2	25.0	25.5	26.7	28.5	24.4	24.9	26.1	27.8	23.2	23.7	24.8	26.4	21.5	21.9	23.0	24.5
		S/T	0.91	0.87	0.79	0.64	0.94	0.91	0.82	0.66	0.96	0.93	0.84	0.68	0.99	0.96	0.86	0.70	1.00	0.99	0.90	0.73	1.00	1.00	0.91	0.73
		ΔT	25	25	23	20	25	25	24	20	25	25	24	20	25	25	24	21	24	25	23	20	23	23	22	19
		kW	1.98	2.02	2.08	2.15	2.13	2.17	2.24	2.31	2.25	2.30	2.37	2.45	2.37	2.42	2.49	2.57	2.46	2.51	2.59	2.68	2.54	2.60	2.68	2.77
		Amps	7.0	7.2	7.4	7.7	7.6	7.8	8.0	8.3	8.2	8.4	8.7	9.0	8.8	9.0	9.3	9.7	9.4	9.6	9.9	10.3	9.9	10.2	10.5	10.9
		Hi PR	235	253	267	279	264	284	300	313	300	323	341	356	342	368	388	405	384	414	437	456	425	457	483	503
		Lo PR	105	112	122	130	111	118	129	138	116	123	134	143	121	129	141	150	127	135	148	157	132	140	153	163
	1000	MBh	28.5	29.0	30.4	32.4	27.8	28.3	29.7	31.7	27.1	27.7	29.0	30.9	26.5	27.0	28.3	30.1	25.1	25.6	26.8	28.6	23.3	23.7	24.9	26.5
		S/T	0.94	0.91	0.82	0.66	0.97	0.94	0.85	0.69	1.00	0.96	0.87	0.71	1.00	0.99	0.90	0.73	1.00	1.00	0.93	0.76	1.00	1.00	0.94	0.76
		ΔT	25	24	23	20	25	24	23	20	25	24	23	20	24	25	23	20	23	24	23	20	21	22	21	19
		kW	2.03	2.07	2.13	2.20	2.18	2.22	2.29	2.36	2.31	2.36	2.43	2.51	2.42	2.48	2.55	2.64	2.52	2.58	2.66	2.74	2.61	2.66	2.75	2.84
		Amps	7.2	7.4	7.6	7.9	7.8	8.0	8.2	8.6	8.5	8.7	9.0	9.3	9.1	9.3	9.6	10.0	9.6	9.9	10.2	10.6	10.2	10.5	10.8	11.2
		Hi PR	242	261	275	287	272	293	309	322	309	333	351	367	352	379	400	417	396	426	450	470	438	471	498	519
		Lo PR	109	116	126	134	115	122	133	142	119	127	138	147	125	133	145	155	131	140	152	162	136	144	158	168
	1125	MBh	29.3	29.9	31.3	33.4	28.6	29.2	30.6	32.6	27.9	28.5	29.8	31.8	27.3	27.8	29.1	31.1	25.9	26.4	27.7	29.5	24.0	24.5	25.6	27.3
		S/T	0.98	0.95	0.86	0.70	1.00	0.98	0.89	0.72	1.00	1.00	0.91	0.74	1.00	1.00	0.94	0.76	1.00	1.00	0.98	0.79	1.00	1.00	0.98	0.80
		ΔT	24	23	22	19	23	23	22	19	23	23	22	19	22	23	22	19	21	22	22	19	20	20	21	18
		kW	2.04	2.08	2.15	2.21	2.19	2.24	2.31	2.38	2.33	2.37	2.45	2.53	2.44	2.49	2.57	2.66	2.54	2.60	2.68	2.77	2.63	2.69	2.77	2.86
		Amps	7.3	7.4	7.7	8.0	7.9	8.1	8.3	8.6	8.5	8.8	9.0	9.4	9.1	9.4	9.7	10.0	9.7	10.0	10.3	10.7	10.3	10.6	10.9	11.3
		Hi PR	245	263	278	290	275	296	312	326	312	336	355	370	356	383	404	422	400	431	455	474	442	476	503	524
		Lo PR	110	117	127	136	116	123	135	143	120	128	140	149	126	135	147	156	133	141	154	164	137	146	159	170

IDB: Entering Indoor Dry Bulb Temperature
High and low pressures are measured at the liquid and suction service valves.

Shaded area reflects ARI conditions

Amps = outdoor unit amps (comp.+fan)
kW = Total system power

EXPANDED COOLING DATA — GSX130361A* / CA*F4860*6**

			Outdoor Ambient Temperature																							
			65ºF				75ºF				85ºF				95ºF				105ºF				115ºF			
			Entering Indoor Wet Bulb Temperature																							
IDB	Airflow		59	63	67	71	59	63	67	71	59	63	67	71	59	63	67	71	59	63	67	71	59	63	67	71
70	1350	MBh	34.3	35.5	38.9	-	33.5	34.7	38.0	-	32.7	33.9	37.1	-	31.9	33.1	36.2	-	30.3	31.4	34.4	-	28.1	29.1	31.9	-
		S/T	0.72	0.60	0.42	-	0.75	0.63	0.43	-	0.77	0.64	0.44	-	0.79	0.66	0.46	-	0.82	0.69	0.48	-	0.83	0.69	0.48	-
		ΔT	17	15	11	-	17	15	11	-	17	15	11	-	17	15	11	-	17	15	11	-	16	14	10	-
		kW	2.45	2.50	2.58	-	2.63	2.69	2.77	-	2.79	2.85	2.94	-	2.94	3.00	3.09	-	3.06	3.12	3.22	-	3.16	3.23	3.33	-
		Amps	8.8	9.0	9.3	-	9.6	9.8	10.1	-	10.4	10.7	11.0	-	11.1	11.4	11.8	-	11.9	12.2	12.6	-	12.6	12.9	13.4	-
		Hi PR	234	252	266	-	262	282	298	-	298	321	339	-	340	366	386	-	382	411	434	-	422	454	480	-
		Lo PR	106	112	123	-	112	119	130	-	116	123	135	-	122	130	142	-	128	136	148	-	132	141	153	-
	1200	MBh	33.3	34.5	37.8	-	32.5	33.7	36.9	-	31.7	32.9	36.1	-	31.0	32.1	35.2	-	29.4	30.5	33.4	-	27.3	28.3	31.0	-
		S/T	0.69	0.58	0.40	-	0.71	0.60	0.41	-	0.73	0.61	0.42	-	0.76	0.63	0.44	-	0.79	0.66	0.45	-	0.79	0.66	0.46	-
		ΔT	18	15	12	-	18	15	12	-	18	15	12	-	18	16	12	-	18	15	12	-	17	14	11	-
		kW	2.43	2.48	2.56	-	2.61	2.67	2.75	-	2.77	2.83	2.92	-	2.91	2.97	3.07	-	3.03	3.10	3.20	-	3.13	3.20	3.31	-
		Amps	8.7	9.0	9.3	-	9.5	9.7	10.0	-	10.3	10.6	10.9	-	11.0	11.3	11.7	-	11.8	12.1	12.5	-	12.5	12.8	13.2	-
		Hi PR	231	249	263	-	260	279	295	-	295	318	336	-	336	362	382	-	378	407	430	-	418	450	475	-
		Lo PR	105	111	122	-	111	118	128	-	115	122	133	-	121	128	140	-	126	135	147	-	131	139	152	-
	1050	MBh	30.7	31.9	34.9	-	30.0	31.1	34.1	-	29.3	30.4	33.3	-	28.6	29.6	32.5	-	27.2	28.2	30.8	-	25.2	26.1	28.6	-
		S/T	0.67	0.56	0.38	-	0.69	0.58	0.40	-	0.71	0.59	0.41	-	0.73	0.61	0.42	-	0.76	0.63	0.44	-	0.76	0.64	0.44	-
		ΔT	18	15	12	-	18	16	12	-	18	16	12	-	18	16	12	-	18	16	12	-	17	15	11	-
		kW	2.38	2.43	2.50	-	2.55	2.61	2.69	-	2.71	2.76	2.85	-	2.84	2.90	2.99	-	2.96	3.02	3.12	-	3.06	3.12	3.22	-
		Amps	8.5	8.7	9.0	-	9.2	9.4	9.7	-	10.0	10.3	10.6	-	10.7	11.0	11.4	-	11.4	11.7	12.1	-	12.1	12.4	12.9	-
		Hi PR	224	242	255	-	252	271	286	-	286	308	326	-	326	351	371	-	367	395	417	-	406	436	461	-
		Lo PR	101	108	118	-	107	114	125	-	111	119	129	-	117	125	136	-	123	130	142	-	127	135	147	-
75	1350	MBh	34.9	35.9	38.9	41.7	34.1	35.1	38.0	40.7	33.3	34.2	37.1	39.8	32.4	**33.4**	36.2	38.8	30.8	31.7	34.4	36.9	28.6	29.4	31.8	34.2
		S/T	0.82	0.74	0.56	0.36	0.85	0.76	0.58	0.37	0.87	0.78	0.59	0.38	0.90	**0.81**	0.61	0.39	0.94	0.84	0.63	0.41	0.94	0.84	0.64	0.41
		ΔT	20	18	15	10	20	18	15	10	20	18	15	10	20	**18**	15	10	20	18	15	10	18	17	14	10
		kW	2.47	2.52	2.60	2.68	2.66	2.71	2.79	2.88	2.82	2.88	2.97	3.06	2.96	**3.02**	3.12	3.22	3.08	3.15	3.25	3.36	3.19	3.26	3.36	3.47
		Amps	8.9	9.1	9.4	9.8	9.6	9.9	10.2	10.6	10.5	10.8	11.1	11.6	11.3	**11.5**	11.9	12.4	12.0	12.3	12.7	13.2	12.7	13.0	13.5	14.0
		Hi PR	236	254	268	280	265	285	301	314	301	324	342	357	343	**369**	390	407	386	415	439	458	427	459	485	506
		Lo PR	107	114	124	132	113	120	131	139	117	125	136	145	123	**131**	143	152	129	137	150	160	133	142	155	165
	1200	MBh	33.9	34.9	37.7	40.5	33.1	34.1	36.9	39.6	32.3	33.2	36.0	38.6	31.5	**32.4**	35.1	37.7	29.9	30.8	33.3	35.8	27.7	28.5	30.9	33.2
		S/T	0.78	0.70	0.53	0.34	0.81	0.73	0.55	0.35	0.83	0.75	0.56	0.36	0.86	**0.77**	0.58	0.37	0.89	0.80	0.60	0.39	0.90	0.81	0.61	0.39
		ΔT	20	19	15	11	21	19	16	11	21	19	16	11	21	**19**	16	11	20	19	15	11	19	18	14	10
		kW	2.45	2.50	2.58	2.66	2.63	2.69	2.77	2.86	2.79	2.85	2.94	3.04	2.94	**3.00**	3.09	3.20	3.06	3.12	3.22	3.33	3.16	3.23	3.33	3.44
		Amps	8.8	9.0	9.3	9.7	9.6	9.8	10.1	10.5	10.4	10.7	11.0	11.5	11.1	**11.4**	11.8	12.3	11.9	12.2	12.6	13.1	12.6	12.9	13.4	13.9
		Hi PR	234	252	266	277	262	282	298	311	298	321	339	354	340	**366**	386	403	382	411	434	453	422	454	480	501
		Lo PR	106	112	123	131	112	119	130	138	116	123	135	144	122	**130**	142	151	128	136	148	158	132	141	153	163
	1050	MBh	31.3	32.2	34.8	37.4	30.5	31.4	34.0	36.5	29.8	30.7	33.2	35.6	29.1	**29.9**	32.4	34.8	27.6	28.4	30.8	33.0	25.6	26.3	28.5	30.6
		S/T	0.76	0.68	0.51	0.33	0.78	0.70	0.53	0.34	0.80	0.72	0.54	0.35	0.83	**0.74**	0.56	0.36	0.86	0.77	0.58	0.37	0.87	0.78	0.59	0.38
		ΔT	21	19	16	11	21	19	16	11	21	19	16	11	21	**19**	16	11	21	19	16	11	19	18	15	10
		kW	2.40	2.45	2.52	2.60	2.57	2.63	2.71	2.79	2.73	2.79	2.87	2.96	2.87	**2.93**	3.02	3.12	2.98	3.05	3.14	3.25	3.08	3.15	3.25	3.36
		Amps	8.6	8.8	9.1	9.4	9.3	9.5	9.8	10.2	10.1	10.4	10.7	11.1	10.8	**11.1**	11.5	11.9	11.5	11.8	12.2	12.7	12.2	12.6	13.0	13.5
		Hi PR	227	244	258	269	254	274	289	302	289	311	329	343	330	**355**	375	391	371	399	421	439	410	441	466	486
		Lo PR	103	109	119	127	108	115	126	134	113	120	131	139	118	**126**	137	146	124	132	144	153	128	136	149	159

IDB: Entering Indoor Dry Bulb Temperature
High and low pressures are measured at the liquid and suction service valves.

Shaded area reflects ACCA (TVA) conditions

Amps = outdoor unit amps (comp.+fan)
kW = Total system power

EXPANDED COOLING DATA — GSX130361A* / CA*F4860*6*** (CONT.)

			Outdoor Ambient Temperature																							
			65ºF				75ºF				85ºF				95ºF				105ºF				115ºF			
			Entering Indoor Wet Bulb Temperature																							
IDB	Airflow		59	63	67	71	59	63	67	71	59	63	67	71	59	63	67	71	59	63	67	71	59	63	67	71
80	1350	MBh	35.5	36.3	38.8	41.4	34.7	35.4	37.9	40.5	33.8	34.6	37.0	39.5	33.0	33.7	36.1	38.5	31.4	32.1	34.2	36.6	29.1	29.7	31.7	33.9
		S/T	0.90	0.85	0.69	0.51	0.93	0.88	0.71	0.53	0.96	0.90	0.73	0.55	1.00	0.93	0.75	0.56	1.00	0.96	0.78	0.59	1.00	0.97	0.79	0.59
		ΔT	22	21	18	15	22	21	18	15	22	21	18	15	22	21	19	15	21	21	18	15	20	20	17	14
		kW	2.49	2.54	2.62	2.70	2.68	2.73	2.82	2.91	2.84	2.90	2.99	3.09	2.98	3.05	3.15	3.25	3.11	3.17	3.28	3.38	3.21	3.28	3.39	3.50
		Amps	9.0	9.2	9.5	9.9	9.7	10.0	10.3	10.7	10.6	10.9	11.2	11.7	11.4	11.6	12.0	12.5	12.1	12.4	12.8	13.3	12.8	13.2	13.6	14.2
		Hi PR	238	257	271	283	268	288	304	317	304	328	346	361	347	373	394	411	390	420	443	462	431	464	490	511
		Lo PR	108	115	125	133	114	121	132	141	118	126	137	146	124	132	144	154	130	139	151	161	135	143	157	167
	1200	MBh	34.5	35.2	37.6	40.2	33.7	34.4	36.8	39.3	32.9	33.6	35.9	38.4	32.1	32.8	**35.0**	37.4	30.5	31.1	33.3	35.5	28.2	28.8	30.8	32.9
		S/T	0.86	0.81	0.66	0.49	0.89	0.84	0.68	0.51	0.91	0.86	0.70	0.52	0.94	0.88	**0.72**	0.54	0.98	0.92	0.75	0.56	0.99	0.93	0.75	0.56
		ΔT	23	22	19	15	23	22	19	15	23	22	19	15	23	22	**19**	15	23	22	19	15	21	20	18	14
		kW	2.47	2.52	2.60	2.68	2.66	2.71	2.79	2.88	2.82	2.88	2.97	3.06	2.96	3.02	**3.12**	3.22	3.08	3.15	3.25	3.36	3.19	3.26	3.36	3.47
		Amps	8.9	9.1	9.4	9.8	9.6	9.9	10.2	10.6	10.5	10.8	11.1	11.6	11.3	11.5	**11.9**	12.4	12.0	12.3	12.7	13.2	12.7	13.1	13.5	14.0
		Hi PR	236	254	268	280	265	285	301	314	301	324	342	357	343	369	**390**	407	386	415	439	458	427	459	485	506
		Lo PR	107	114	124	132	113	120	131	140	117	125	136	145	123	131	**143**	152	129	137	150	160	133	142	155	165
	1050	MBh	31.8	32.5	34.7	37.1	31.1	31.7	33.9	36.3	30.3	31.0	33.1	35.4	29.6	30.2	32.3	34.5	28.1	28.7	30.7	32.8	26.0	26.6	28.4	30.4
		S/T	0.83	0.78	0.63	0.47	0.86	0.81	0.66	0.49	0.88	0.83	0.67	0.50	0.91	0.85	0.69	0.52	0.94	0.89	0.72	0.54	0.95	0.89	0.73	0.54
		ΔT	23	22	19	15	23	22	19	16	23	22	20	16	24	23	20	16	23	22	19	15	22	21	18	14
		kW	2.42	2.46	2.54	2.62	2.59	2.65	2.73	2.81	2.75	2.81	2.90	2.99	2.89	2.95	3.04	3.14	3.01	3.07	3.17	3.27	3.11	3.18	3.28	3.39
		Amps	8.7	8.9	9.2	9.5	9.4	9.6	9.9	10.3	10.2	10.5	10.8	11.2	10.9	11.2	11.6	12.0	11.7	11.9	12.4	12.8	12.4	12.7	13.1	13.6
		Hi PR	229	246	260	271	257	277	292	305	292	315	332	346	333	358	378	395	375	403	426	444	414	445	470	490
		Lo PR	104	110	120	128	109	116	127	135	114	121	132	141	119	127	139	148	125	133	145	155	129	138	150	160
85	1350	MBh	36.1	36.8	38.6	41.1	35.3	36.0	37.7	40.2	34.4	35.1	36.8	39.2	33.6	34.2	35.9	38.3	31.9	32.5	34.1	36.4	29.6	30.1	31.6	33.7
		S/T	0.95	0.91	0.82	0.67	0.98	0.95	0.85	0.69	1.00	0.97	0.87	0.71	1.00	1.00	0.90	0.73	1.00	1.00	0.94	0.76	1.00	1.00	0.94	0.77
		ΔT	23	23	22	19	24	23	22	19	23	23	22	19	23	23	22	19	22	22	22	19	20	21	20	18
		kW	2.51	2.56	2.64	2.72	2.70	2.75	2.84	2.93	2.86	2.92	3.02	3.11	3.01	3.07	3.17	3.27	3.13	3.20	3.30	3.41	3.24	3.31	3.42	3.53
		Amps	9.1	9.3	9.6	10.0	9.8	10.1	10.4	10.8	10.7	11.0	11.4	11.8	11.5	11.8	12.2	12.6	12.2	12.5	13.0	13.5	13.0	13.3	13.8	14.3
		Hi PR	241	259	274	285	270	291	307	320	307	331	349	364	350	377	398	415	394	424	448	467	435	468	495	516
		Lo PR	109	116	126	135	115	122	134	142	120	127	139	148	126	134	146	155	132	140	153	163	136	145	158	168
	1200	MBh	35.1	35.7	37.4	39.9	34.3	34.9	36.6	39.0	33.4	34.1	35.7	38.1	32.6	33.3	34.8	37.2	31.0	31.6	33.1	35.3	28.7	29.3	30.6	32.7
		S/T	0.90	0.87	0.79	0.64	0.93	0.90	0.81	0.66	0.96	0.92	0.83	0.68	0.99	0.95	0.86	0.70	1.00	0.99	0.89	0.73	1.00	1.00	0.90	0.73
		ΔT	24	24	23	19	25	24	23	20	25	24	23	20	25	24	23	20	24	24	23	20	22	22	21	18
		kW	2.49	2.54	2.62	2.70	2.68	2.73	2.82	2.91	2.84	2.90	2.99	3.09	2.98	3.05	3.15	3.25	3.11	3.17	3.28	3.38	3.21	3.28	3.39	3.50
		Amps	9.0	9.2	9.5	9.9	9.7	10.0	10.3	10.7	10.6	10.9	11.2	11.7	11.4	11.6	12.0	12.5	12.1	12.4	12.8	13.3	12.8	13.2	13.6	14.2
		Hi PR	238	257	271	283	268	288	304	317	304	328	346	361	347	373	394	411	390	420	443	462	431	464	490	511
		Lo PR	108	115	125	133	114	121	132	141	118	126	137	146	124	132	144	154	130	139	151	161	135	143	157	167
	1050	MBh	32.4	33.0	34.6	36.9	31.6	32.2	33.8	36.0	30.9	31.5	32.9	35.1	30.1	30.7	32.1	34.3	28.6	29.2	30.5	32.6	26.5	27.0	28.3	30.2
		S/T	0.87	0.84	0.76	0.61	0.90	0.87	0.78	0.64	0.92	0.89	0.80	0.65	0.95	0.92	0.83	0.67	0.99	0.95	0.86	0.70	1.00	0.96	0.87	0.71
		ΔT	25	24	23	20	25	25	23	20	25	25	23	20	25	25	23	20	25	24	23	20	23	23	22	19
		kW	2.43	2.48	2.56	2.64	2.61	2.67	2.75	2.84	2.77	2.83	2.92	3.01	2.91	2.97	3.07	3.17	3.03	3.10	3.20	3.30	3.13	3.20	3.30	3.41
		Amps	8.7	9.0	9.3	9.6	9.5	9.7	10.0	10.4	10.3	10.6	10.9	11.3	11.0	11.3	11.7	12.2	11.8	12.1	12.5	13.0	12.5	12.8	13.2	13.8
		Hi PR	231	249	263	274	260	279	295	308	295	318	335	350	336	362	382	399	378	407	430	448	418	450	475	495
		Lo PR	105	111	121	129	110	118	128	137	115	122	133	142	121	128	140	149	126	134	147	156	131	139	152	162

IDB: Entering Indoor Dry Bulb Temperature
High and low pressures are measured at the liquid and suction service valves.

Shaded area reflects ARI conditions

Amps = outdoor unit amps (comp.+fan)
kW = Total system power

EXPANDED COOLING DATA — GSX130421A* / CA*F4860*6***

			Outdoor Ambient Temperature																							
			65ºF				75ºF				85ºF				95ºF				105ºF				115ºF			
			Entering Indoor Wet Bulb Temperature																							
IDB	Airflow		59	63	67	71	59	63	67	71	59	63	67	71	59	63	67	71	59	63	67	71	59	63	67	71
70	1575	MBh	39.2	40.6	44.5	-	38.3	39.7	43.5	-	37.4	38.7	42.4	-	36.5	37.8	41.4	-	34.6	35.9	39.3	-	32.1	33.3	36.4	-
		S/T	0.73	0.61	0.42	-	0.76	0.63	0.44	-	0.78	0.65	0.45	-	0.80	0.67	0.47	-	0.83	0.70	0.48	-	0.84	0.70	0.49	-
		ΔT	17	15	11	-	17	15	11	-	17	15	11	-	17	15	11	-	17	15	11	-	16	14	10	-
		kW	2.83	2.89	2.97	-	3.03	3.10	3.19	-	3.21	3.28	3.38	-	3.37	3.44	3.55	-	3.51	3.58	3.69	-	3.62	3.70	3.82	-
		Amps	10.1	10.4	10.7	-	11.0	11.3	11.7	-	12.0	12.3	12.7	-	12.8	13.2	13.6	-	13.7	14.1	14.6	-	14.6	14.9	15.5	-
		Hi PR	236	253	268	-	264	284	300	-	301	323	342	-	342	368	389	-	385	414	438	-	425	458	484	-
		Lo PR	107	114	124	-	113	120	131	-	118	125	137	-	124	131	144	-	130	138	150	-	134	143	156	-
	1400	MBh	38.1	39.4	43.2	-	37.2	38.5	42.2	-	36.3	37.6	41.2	-	35.4	36.7	40.2	-	33.6	34.9	38.2	-	31.2	32.3	35.4	-
		S/T	0.70	0.58	0.40	-	0.72	0.61	0.42	-	0.74	0.62	0.43	-	0.77	0.64	0.44	-	0.80	0.66	0.46	-	0.80	0.67	0.46	-
		ΔT	17	15	11	-	18	15	12	-	18	15	12	-	18	15	12	-	18	15	12	-	16	14	11	-
		kW	2.81	2.87	2.95	-	3.01	3.07	3.17	-	3.19	3.26	3.36	-	3.35	3.42	3.52	-	3.48	3.55	3.67	-	3.60	3.67	3.79	-
		Amps	10.0	10.3	10.6	-	10.9	11.2	11.5	-	11.9	12.2	12.6	-	12.7	13.1	13.5	-	13.6	13.9	14.4	-	14.4	14.8	15.3	-
		Hi PR	233	251	265	-	262	282	297	-	298	320	338	-	339	365	385	-	381	410	433	-	421	453	479	-
		Lo PR	106	113	123	-	112	119	130	-	116	124	135	-	122	130	142	-	128	136	149	-	133	141	154	-
	1225	MBh	35.1	36.4	39.9	-	34.3	35.6	39.0	-	33.5	34.7	38.0	-	32.7	33.9	37.1	-	31.0	32.2	35.2	-	28.8	29.8	32.7	-
		S/T	0.67	0.56	0.39	-	0.70	0.58	0.40	-	0.72	0.60	0.41	-	0.74	0.62	0.43	-	0.77	0.64	0.44	-	0.77	0.65	0.45	-
		ΔT	18	15	12	-	18	16	12	-	18	16	12	-	18	16	12	-	18	15	12	-	17	14	11	-
		kW	2.75	2.80	2.88	-	2.94	3.00	3.09	-	3.12	3.18	3.28	-	3.27	3.34	3.44	-	3.40	3.47	3.58	-	3.51	3.58	3.70	-
		Amps	9.7	10.0	10.3	-	10.6	10.8	11.2	-	11.5	11.8	12.2	-	12.4	12.7	13.1	-	13.2	13.5	14.0	-	14.0	14.4	14.9	-
		Hi PR	226	243	257	-	254	273	288	-	289	311	328	-	329	354	374	-	370	398	420	-	409	440	464	-
		Lo PR	103	109	120	-	109	116	126	-	113	120	131	-	119	126	138	-	124	132	144	-	129	137	149	-
75	1575	MBh	39.9	41.0	44.4	47.7	38.9	40.1	43.4	46.6	38.0	39.1	42.4	45.5	37.1	**38.2**	41.3	44.4	35.2	36.3	39.3	42.1	32.6	33.6	36.4	39.0
		S/T	0.83	0.75	0.56	0.36	0.86	0.77	0.58	0.38	0.89	0.79	0.60	0.39	0.91	**0.82**	0.62	0.40	0.95	0.85	0.64	0.41	0.96	0.86	0.65	0.42
		ΔT	19	18	15	10	20	18	15	10	20	18	15	10	20	**18**	15	10	20	18	15	10	18	17	14	9
		kW	2.85	2.91	3.00	3.09	3.06	3.12	3.21	3.31	3.24	3.31	3.41	3.52	3.40	**3.47**	3.58	3.69	3.54	3.61	3.73	3.84	3.65	3.73	3.85	3.98
		Amps	10.2	10.5	10.8	11.3	11.1	11.4	11.8	12.2	12.1	12.4	12.8	13.3	13.0	**13.3**	13.8	14.3	13.8	14.2	14.7	15.3	14.7	15.1	15.6	16.2
		Hi PR	238	256	270	282	267	287	303	316	304	327	345	360	346	**372**	393	410	389	419	442	461	430	463	488	509
		Lo PR	108	115	126	134	114	122	133	141	119	126	138	147	125	**133**	145	154	131	139	152	162	135	144	157	167
	1400	MBh	38.7	39.8	43.1	46.3	37.8	38.9	42.1	45.2	36.9	38.0	41.1	44.1	36.0	**37.1**	40.1	43.1	34.2	35.2	38.1	40.9	31.7	32.6	35.3	37.9
		S/T	0.79	0.71	0.54	0.35	0.82	0.74	0.56	0.36	0.84	0.76	0.57	0.37	0.87	**0.78**	0.59	0.38	0.90	0.81	0.61	0.39	0.91	0.82	0.62	0.40
		ΔT	20	19	15	11	20	19	15	11	20	19	15	11	21	**19**	16	11	20	19	15	11	19	17	14	10
		kW	2.83	2.89	2.97	3.06	3.04	3.10	3.19	3.29	3.22	3.28	3.38	3.49	3.37	**3.44**	3.55	3.66	3.51	3.58	3.70	3.81	3.62	3.70	3.82	3.94
		Amps	10.1	10.4	10.7	11.2	11.0	11.3	11.7	12.1	12.0	12.3	12.7	13.2	12.9	**13.2**	13.6	14.2	13.7	14.1	14.6	15.1	14.6	14.9	15.5	16.1
		Hi PR	236	253	268	279	264	284	300	313	301	323	342	356	342	**368**	389	406	385	415	438	457	426	458	484	504
		Lo PR	107	114	124	133	113	120	131	140	118	125	137	146	124	**131**	144	153	130	138	150	160	134	143	156	166
	1225	MBh	35.7	36.8	39.8	42.7	34.9	35.9	38.9	41.7	34.1	35.1	38.0	40.7	33.2	**34.2**	37.0	39.7	31.6	32.5	35.2	37.8	29.2	30.1	32.6	35.0
		S/T	0.77	0.69	0.52	0.33	0.79	0.71	0.54	0.35	0.81	0.73	0.55	0.35	0.84	**0.75**	0.57	0.37	0.87	0.78	0.59	0.38	0.88	0.79	0.60	0.38
		ΔT	21	19	16	11	21	19	16	11	21	19	16	11	21	**19**	16	11	21	19	16	11	19	18	15	10
		kW	2.77	2.82	2.91	2.99	2.97	3.03	3.12	3.21	3.14	3.20	3.30	3.41	3.29	**3.36**	3.47	3.58	3.43	3.50	3.61	3.72	3.54	3.61	3.73	3.85
		Amps	9.8	10.1	10.4	10.8	10.7	10.9	11.3	11.8	11.6	11.9	12.4	12.8	12.5	**12.8**	13.2	13.8	13.3	13.7	14.1	14.7	14.1	14.5	15.0	15.6
		Hi PR	228	246	260	271	256	276	291	304	292	314	331	346	332	**357**	377	394	374	402	425	443	413	444	469	489
		Lo PR	104	111	121	129	110	117	128	136	114	121	133	141	120	**128**	139	148	126	134	146	155	130	138	151	161

IDB: Entering Indoor Dry Bulb Temperature

Shaded area reflects ACCA (TVA) conditions

Amps = outdoor unit amps (comp.+fan)

High and low pressures are measured at the liquid and suction service valves.

kW = Total system power

Expanded Cooling Data — GSX130421A* / CA*F4860*6*** (cont.)

			Outdoor Ambient Temperature																							
			65ºF				75ºF				85ºF				95ºF				105ºF				115ºF			
			Entering Indoor Wet Bulb Temperature																							
IDB	Airflow		59	63	67	71	59	63	67	71	59	63	67	71	59	63	67	71	59	63	67	71	59	63	67	71
80	1575	MBh	40.6	41.5	44.3	47.3	39.6	40.5	43.3	46.2	38.7	39.5	42.2	45.1	37.7	38.6	41.2	44.0	35.9	36.6	39.1	41.8	33.2	33.9	36.3	38.8
		S/T	0.91	0.86	0.70	0.52	0.95	0.89	0.72	0.54	1.00	0.91	0.74	0.55	1.00	0.94	0.77	0.57	1.00	1.00	0.79	0.59	1.00	1.00	0.80	0.60
		ΔT	22	21	18	14	22	21	18	15	23	21	18	15	22	21	18	15	21	21	18	15	19	20	17	14
		kW	2.87	2.93	3.02	3.11	3.08	3.14	3.24	3.34	3.27	3.33	3.44	3.54	3.43	3.50	3.61	3.72	3.56	3.64	3.76	3.88	3.68	3.76	3.88	4.01
		Amps	10.3	10.6	10.9	11.4	11.2	11.5	11.9	12.3	12.2	12.5	13.0	13.5	13.1	13.4	13.9	14.5	14.0	14.3	14.8	15.4	14.8	15.2	15.8	16.4
		Hi PR	240	259	273	285	270	290	306	320	307	330	349	363	349	376	397	414	393	423	447	466	434	467	493	515
		Lo PR	109	116	127	135	116	123	134	143	120	128	139	148	126	134	146	156	132	141	153	163	137	145	159	169
	1400	MBh	39.4	40.2	43.0	46.0	38.5	39.3	42.0	44.9	37.6	38.4	41.0	43.8	36.6	37.4	**40.0**	42.8	34.8	35.6	38.0	40.6	32.2	32.9	35.2	37.6
		S/T	0.87	0.82	0.67	0.50	0.90	0.85	0.69	0.52	0.93	0.87	0.71	0.53	0.96	0.90	**0.73**	0.55	0.99	0.93	0.76	0.57	1.00	0.94	0.76	0.57
		ΔT	23	22	19	15	23	22	19	15	23	22	19	15	23	22	**19**	15	23	22	19	15	21	20	18	14
		kW	2.85	2.91	3.00	3.09	3.06	3.12	3.22	3.31	3.24	3.31	3.41	3.52	3.40	3.47	**3.58**	3.69	3.54	3.61	3.73	3.85	3.65	3.73	3.85	3.98
		Amps	10.2	10.5	10.8	11.3	11.1	11.4	11.8	12.2	12.1	12.4	12.8	13.3	13.0	13.3	**13.8**	14.3	13.8	14.2	14.7	15.3	14.7	15.1	15.6	16.2
		Hi PR	238	256	270	282	267	287	303	316	304	327	345	360	346	372	**393**	410	389	419	442	461	430	463	488	510
		Lo PR	108	115	126	134	114	122	133	141	119	126	138	147	125	133	**145**	154	131	139	152	162	135	144	157	167
	1225	MBh	36.4	37.1	39.7	42.4	35.5	36.3	38.8	41.4	34.7	35.4	37.8	40.5	33.8	34.6	36.9	39.5	32.1	32.8	35.1	37.5	29.8	30.4	32.5	34.7
		S/T	0.84	0.79	0.64	0.48	0.87	0.82	0.67	0.50	0.89	0.84	0.68	0.51	0.92	0.86	0.70	0.53	0.96	0.90	0.73	0.55	0.97	0.91	0.74	0.55
		ΔT	23	22	19	15	23	22	19	15	23	22	19	15	23	22	20	16	23	22	19	15	22	21	18	14
		kW	2.79	2.84	2.93	3.02	2.99	3.05	3.14	3.24	3.16	3.23	3.33	3.43	3.32	3.39	3.49	3.61	3.45	3.53	3.64	3.75	3.57	3.64	3.76	3.88
		Amps	9.9	10.2	10.5	10.9	10.8	11.0	11.4	11.9	11.8	12.1	12.5	13.0	12.6	12.9	13.4	13.9	13.4	13.8	14.3	14.8	14.3	14.6	15.2	15.8
		Hi PR	231	248	262	274	259	279	294	307	295	317	335	349	335	361	381	398	377	406	429	447	417	449	474	494
		Lo PR	105	112	122	130	111	118	129	137	115	123	134	143	121	129	141	150	127	135	147	157	131	140	152	162
85	1575	MBh	41.3	42.1	44.1	47.0	40.3	41.1	43.0	45.9	39.4	40.1	42.0	44.8	38.4	39.1	41.0	43.7	36.5	37.2	38.9	41.5	33.8	34.4	36.1	38.5
		S/T	0.96	0.92	0.83	0.68	0.99	0.96	0.86	0.70	1.00	0.98	0.89	0.72	1.00	1.00	0.92	0.74	1.00	1.00	0.95	0.77	1.00	1.00	0.96	0.78
		ΔT	23	23	21	19	23	23	22	19	23	23	22	19	22	23	22	19	21	22	22	19	20	20	20	17
		kW	2.90	2.95	3.04	3.13	3.11	3.17	3.27	3.37	3.29	3.36	3.46	3.57	3.45	3.53	3.64	3.75	3.59	3.67	3.79	3.91	3.71	3.79	3.91	4.04
		Amps	10.4	10.7	11.0	11.5	11.3	11.6	12.0	12.5	12.3	12.7	13.1	13.6	13.2	13.6	14.0	14.6	14.1	14.5	15.0	15.6	15.0	15.4	15.9	16.5
		Hi PR	243	261	276	288	272	293	309	323	310	333	352	367	353	380	401	418	397	427	451	470	439	472	498	520
		Lo PR	110	117	128	137	117	124	135	144	121	129	141	150	127	135	148	158	133	142	155	165	138	147	160	171
	1400	MBh	40.1	40.9	42.8	45.6	39.1	39.9	41.8	44.6	38.2	39.0	40.8	43.5	37.3	38.0	39.8	42.5	35.4	36.1	37.8	40.3	32.8	33.4	35.0	37.4
		S/T	0.91	0.88	0.80	0.65	0.95	0.91	0.82	0.67	0.97	0.94	0.85	0.69	1.00	0.97	0.87	0.71	1.00	1.00	0.91	0.74	1.00	1.00	0.91	0.74
		ΔT	24	24	22	19	24	24	23	20	24	24	23	20	24	24	23	20	23	24	22	19	22	22	21	18
		kW	2.87	2.93	3.02	3.11	3.08	3.14	3.24	3.34	3.27	3.33	3.44	3.54	3.43	3.50	3.61	3.72	3.56	3.64	3.76	3.88	3.68	3.76	3.88	4.01
		Amps	10.3	10.6	10.9	11.4	11.2	11.5	11.9	12.3	12.2	12.5	13.0	13.5	13.1	13.4	13.9	14.5	14.0	14.3	14.8	15.4	14.8	15.2	15.8	16.4
		Hi PR	240	259	273	285	270	290	306	320	307	330	349	363	349	376	397	414	393	423	447	466	434	467	493	515
		Lo PR	109	116	127	135	116	123	134	143	120	128	139	148	126	134	146	156	132	141	153	163	137	145	159	169
	1225	MBh	37.0	37.7	39.5	42.1	36.1	36.8	38.6	41.2	35.3	36.0	37.7	40.2	34.4	35.1	36.7	39.2	32.7	33.3	34.9	37.2	30.3	30.9	32.3	34.5
		S/T	0.88	0.85	0.77	0.62	0.91	0.88	0.80	0.65	0.94	0.90	0.82	0.66	0.97	0.93	0.84	0.68	1.00	0.97	0.87	0.71	1.00	0.98	0.88	0.71
		ΔT	24	24	23	20	25	24	23	20	25	24	23	20	25	25	23	20	25	24	23	20	23	23	21	19
		kW	2.81	2.87	2.95	3.04	3.01	3.07	3.16	3.26	3.19	3.25	3.35	3.46	3.35	3.42	3.52	3.63	3.48	3.55	3.66	3.78	3.59	3.67	3.79	3.91
		Amps	10.0	10.3	10.6	11.0	10.9	11.2	11.5	12.0	11.9	12.2	12.6	13.1	12.7	13.0	13.5	14.0	13.6	13.9	14.4	15.0	14.4	14.8	15.3	15.9
		Hi PR	233	251	265	276	262	281	297	310	297	320	338	353	339	365	385	402	381	410	433	452	421	453	479	499
		Lo PR	106	113	123	131	112	119	130	139	116	124	135	144	122	130	142	151	128	136	149	159	133	141	154	164

IDB: Entering Indoor Dry Bulb Temperature

Shaded area reflects ARI conditions

Amps = outdoor unit amps (comp.+fan)

High and low pressures are measured at the liquid and suction service valves.

kW = Total system power

EXPANDED COOLING DATA — GSX130421B* / CA*F3642*6B*

IDB	Airflow		Outdoor Ambient Temperature 65ºF				75ºF				85ºF				95ºF				105ºF				115ºF			
			Entering Indoor Wet Bulb Temperature																							
			59	63	67	71	59	63	67	71	59	63	67	71	59	63	67	71	59	63	67	71	59	63	67	71
70	1225	MBh	35.1	36.4	39.9	-	34.3	35.6	39.0	-	33.5	34.7	38.0	-	32.7	33.9	37.1	-	31.0	32.2	35.2	-	28.8	29.8	32.7	-
		S/T	0.69	0.57	0.40	-	0.71	0.59	0.41	-	0.73	0.61	0.42	-	0.75	0.63	0.44	-	0.78	0.65	0.45	-	0.79	0.66	0.46	-
		ΔT	18	16	12	-	18	16	12	-	18	16	12	-	18	16	12	-	18	16	12	-	17	15	11	-
		kW	2.77	2.83	2.91	-	2.97	3.03	3.12	-	3.14	3.21	3.30	-	3.29	3.36	3.46	-	3.42	3.49	3.60	-	3.53	3.61	3.72	-
		Amps	10.5	10.7	11.0	-	11.3	11.6	11.9	-	12.3	12.5	13.0	-	13.1	13.4	13.8	-	13.9	14.3	14.7	-	14.7	15.1	15.6	-
		Hi PR	211	227	240	-	237	255	269	-	269	290	306	-	307	330	348	-	345	371	392	-	381	410	433	-
		Lo PR	102	108	118	-	108	115	125	-	112	119	130	-	118	125	137	-	123	131	143	-	127	136	148	-
	1400	MBh	38.1	39.4	43.2	-	37.2	38.5	42.2	-	36.3	37.6	41.2	-	35.4	36.7	40.2	-	33.6	34.9	38.2	-	31.2	32.3	35.4	-
		S/T	0.71	0.59	0.41	-	0.74	0.62	0.43	-	0.76	0.63	0.44	-	0.78	0.65	0.45	-	0.81	0.68	0.47	-	0.82	0.68	0.47	-
		ΔT	18	15	12	-	18	16	12	-	18	16	12	-	18	16	12	-	18	15	12	-	17	14	11	-
		kW	2.84	2.89	2.98	-	3.04	3.10	3.19	-	3.22	3.28	3.38	-	3.37	3.44	3.55	-	3.50	3.58	3.69	-	3.62	3.70	3.81	-
		Amps	10.7	11.0	11.4	-	11.6	11.9	12.3	-	12.6	12.9	13.3	-	13.5	13.8	14.2	-	14.3	14.7	15.1	-	15.2	15.5	16.0	-
		Hi PR	217	234	247	-	244	263	277	-	277	299	315	-	316	340	359	-	355	383	404	-	393	423	446	-
		Lo PR	105	112	122	-	111	118	129	-	115	123	134	-	121	129	141	-	127	135	147	-	131	140	153	-
	1575	MBh	39.2	40.6	44.5	-	38.3	39.7	43.5	-	37.4	38.7	42.4	-	36.5	37.8	41.4	-	34.6	35.9	39.3	-	32.1	33.3	36.4	-
		S/T	0.75	0.62	0.43	-	0.77	0.65	0.45	-	0.79	0.66	0.46	-	0.82	0.68	0.47	-	0.85	0.71	0.49	-	0.86	0.72	0.50	-
		ΔT	17	15	11	-	17	15	11	-	17	15	11	-	17	15	11	-	17	15	11	-	16	14	11	-
		kW	2.86	2.91	3.00	-	3.06	3.12	3.21	-	3.24	3.31	3.41	-	3.40	3.47	3.57	-	3.53	3.61	3.72	-	3.65	3.72	3.84	-
		Amps	10.8	11.1	11.5	-	11.7	12.0	12.4	-	12.7	13.0	13.4	-	13.6	13.9	14.4	-	14.4	14.8	15.3	-	15.3	15.7	16.2	-
		Hi PR	220	236	250	-	246	265	280	-	280	302	318	-	319	343	363	-	359	386	408	-	397	427	451	-
		Lo PR	106	113	123	-	112	119	130	-	117	124	135	-	122	130	142	-	128	136	149	-	133	141	154	-
75	1225	MBh	35.7	36.8	39.8	42.7	34.9	35.9	38.9	41.7	34.1	35.1	38.0	40.7	33.2	**34.2**	37.0	39.7	31.6	32.5	35.2	37.8	29.2	30.1	32.6	35.0
		S/T	0.78	0.70	0.53	0.34	0.81	0.72	0.55	0.35	0.83	0.74	0.56	0.36	0.86	**0.77**	0.58	0.37	0.89	0.79	0.60	0.39	0.90	0.80	0.61	0.39
		ΔT	21	19	16	11	21	19	16	11	21	20	16	11	21	**20**	16	11	21	19	16	11	20	18	15	10
		kW	2.80	2.85	2.93	3.02	2.99	3.05	3.14	3.24	3.17	3.23	3.33	3.43	3.32	**3.39**	3.49	3.60	3.45	3.52	3.63	3.74	3.56	3.64	3.75	3.87
		Amps	10.6	10.8	11.1	11.6	11.4	11.7	12.0	12.5	12.4	12.7	13.1	13.6	13.2	**13.5**	14.0	14.5	14.0	14.4	14.9	15.4	14.9	15.2	15.7	16.3
		Hi PR	213	229	242	252	239	257	272	283	272	293	309	322	310	**333**	352	367	348	375	396	413	385	414	437	456
		Lo PR	103	110	120	127	109	116	126	135	113	120	131	140	119	**126**	138	147	124	132	145	154	129	137	149	159
	1400	MBh	38.7	39.8	43.1	46.3	37.8	38.9	42.1	45.2	36.9	38.0	41.1	44.1	36.0	**37.1**	40.1	43.1	34.2	35.2	38.1	40.9	31.7	32.6	35.3	37.9
		S/T	0.81	0.72	0.55	0.35	0.84	0.75	0.57	0.37	0.86	0.77	0.58	0.37	0.89	**0.79**	0.60	0.39	0.92	0.82	0.62	0.40	0.93	0.83	0.63	0.40
		ΔT	21	19	16	11	21	19	16	11	21	19	16	11	21	**19**	16	11	21	19	16	11	19	18	15	10
		kW	2.86	2.91	3.00	3.09	3.06	3.12	3.22	3.31	3.24	3.31	3.41	3.51	3.40	**3.47**	3.58	3.69	3.53	3.61	3.72	3.84	3.65	3.73	3.84	3.97
		Amps	10.8	11.1	11.5	11.9	11.7	12.0	12.4	12.8	12.7	13.0	13.4	13.9	13.6	**13.9**	14.4	14.9	14.4	14.8	15.3	15.9	15.3	15.7	16.2	16.8
		Hi PR	220	236	250	260	246	265	280	292	280	302	318	332	319	**344**	363	378	359	386	408	426	397	427	451	470
		Lo PR	106	113	123	131	112	119	130	139	117	124	135	144	122	**130**	142	151	128	136	149	159	133	141	154	164
	1575	MBh	39.9	41.0	44.4	47.7	38.9	40.1	43.4	46.6	38.0	39.1	42.4	45.5	37.1	**38.2**	41.3	44.4	35.2	36.3	39.3	42.1	32.6	33.6	36.4	39.0
		S/T	0.85	0.76	0.57	0.37	0.88	0.79	0.60	0.38	0.90	0.81	0.61	0.39	0.93	**0.83**	0.63	0.41	0.97	0.86	0.65	0.42	0.97	0.87	0.66	0.42
		ΔT	20	18	15	10	20	18	15	10	20	18	15	10	20	**19**	15	10	20	18	15	10	19	17	14	10
		kW	2.88	2.94	3.02	3.11	3.08	3.15	3.24	3.34	3.26	3.33	3.43	3.54	3.42	**3.50**	3.60	3.72	3.56	3.63	3.75	3.87	3.68	3.75	3.87	4.00
		Amps	10.9	11.2	11.6	12.0	11.8	12.1	12.5	13.0	12.8	13.1	13.6	14.1	13.7	**14.0**	14.5	15.0	14.6	14.9	15.4	16.0	15.4	15.8	16.3	17.0
		Hi PR	222	239	252	263	249	268	283	295	283	305	322	335	322	**347**	366	382	363	390	412	430	401	431	455	475
		Lo PR	107	114	124	133	113	120	132	140	118	125	137	146	124	**132**	144	153	130	138	150	160	134	143	156	166

IDB: Entering Indoor Dry Bulb Temperature
High and low pressures are measured at the liquid and suction service valves.

Shaded area reflects ACCA (TVA) conditions

Amps = outdoor unit amps (comp.+fan)
kW = Total system power

EXPANDED COOLING DATA — GSX130421B* / CA*F3642*6B* (CONT.)

			Outdoor Ambient Temperature																							
			65ºF				75ºF				85ºF				95ºF				105ºF				115ºF			
			Entering Indoor Wet Bulb Temperature																							
IDB	Airflow		59	63	67	71	59	63	67	71	59	63	67	71	59	63	67	71	59	63	67	71	59	63	67	71
80	1225	MBh	36.4	37.1	39.7	42.4	35.5	36.3	38.8	41.4	34.7	35.4	37.8	40.5	33.8	34.6	36.9	39.5	32.1	32.8	35.1	37.5	29.8	30.4	32.5	34.7
		S/T	0.86	0.80	0.65	0.49	0.89	0.83	0.68	0.51	0.91	0.85	0.69	0.52	0.94	0.88	0.72	0.54	0.97	0.91	0.74	0.56	0.98	0.92	0.75	0.56
		ΔT	23	22	19	16	24	23	20	16	24	23	20	16	24	23	20	16	23	23	20	16	22	21	18	15
		kW	2.82	2.87	2.95	3.04	3.01	3.07	3.17	3.26	3.19	3.25	3.35	3.46	3.34	3.41	3.52	3.63	3.48	3.55	3.66	3.77	3.59	3.67	3.78	3.90
		Amps	10.6	10.9	11.2	11.7	11.5	11.8	12.2	12.6	12.5	12.8	13.2	13.7	13.3	13.6	14.1	14.6	14.2	14.5	15.0	15.6	15.0	15.4	15.9	16.5
		Hi PR	215	232	245	255	241	260	274	286	275	296	312	325	313	337	355	371	352	379	400	417	389	418	442	461
		Lo PR	104	111	121	129	110	117	128	136	114	121	133	141	120	128	139	148	126	134	146	155	130	138	151	161
	1400	MBh	39.4	40.2	43.0	46.0	38.5	39.3	42.0	44.9	37.6	38.4	41.0	43.8	36.6	37.4	**40.0**	42.8	34.8	35.6	38.0	40.6	32.2	32.9	35.2	37.6
		S/T	0.89	0.83	0.68	0.51	0.92	0.86	0.70	0.52	0.94	0.88	0.72	0.54	0.97	0.91	**0.74**	0.56	1.00	0.95	0.77	0.58	1.00	0.96	0.78	0.58
		ΔT	23	22	19	15	23	22	19	15	23	22	19	15	23	22	**20**	16	23	22	19	15	21	21	18	14
		kW	2.88	2.94	3.02	3.11	3.08	3.15	3.24	3.34	3.27	3.33	3.43	3.54	3.42	3.50	**3.60**	3.72	3.56	3.64	3.75	3.87	3.68	3.76	3.87	4.00
		Amps	10.9	11.2	11.6	12.0	11.8	12.1	12.5	13.0	12.8	13.1	13.6	14.1	13.7	14.0	**14.5**	15.0	14.6	14.9	15.4	16.0	15.4	15.8	16.3	17.0
		Hi PR	222	239	252	263	249	268	283	295	283	305	322	336	322	347	**366**	382	363	390	412	430	401	431	455	475
		Lo PR	107	114	125	133	113	120	132	140	118	125	137	146	124	132	**144**	153	130	138	150	160	134	143	156	166
	1575	MBh	40.6	41.5	44.3	47.3	39.6	40.5	43.3	46.2	38.7	39.5	42.2	45.1	37.7	38.6	41.2	44.0	35.9	36.6	39.1	41.8	33.2	33.9	36.3	38.8
		S/T	0.93	0.87	0.71	0.53	0.96	0.90	0.74	0.55	1.00	0.93	0.75	0.56	1.00	0.96	0.78	0.58	1.00	1.00	0.81	0.60	1.00	1.00	0.82	0.61
		ΔT	22	21	18	15	22	21	19	15	23	21	19	15	22	22	19	15	21	21	18	15	19	20	17	14
		kW	2.90	2.96	3.04	3.14	3.11	3.17	3.26	3.36	3.29	3.36	3.46	3.57	3.45	3.52	3.63	3.75	3.59	3.66	3.78	3.90	3.71	3.79	3.90	4.03
		Amps	11.0	11.3	11.7	12.1	11.9	12.2	12.6	13.1	12.9	13.3	13.7	14.2	13.8	14.2	14.6	15.2	14.7	15.1	15.6	16.2	15.6	16.0	16.5	17.1
		Hi PR	224	241	255	266	251	271	286	298	286	308	325	339	326	350	370	386	366	394	416	434	405	436	460	480
		Lo PR	108	115	126	134	114	122	133	141	119	126	138	147	125	133	145	154	131	139	152	162	135	144	157	167
85	1225	MBh	37.0	37.7	39.5	42.1	36.1	36.8	38.6	41.2	35.3	36.0	37.7	40.2	34.4	35.1	36.7	39.2	32.7	33.3	34.9	37.2	30.3	30.9	32.3	34.5
		S/T	0.90	0.87	0.78	0.63	0.93	0.90	0.81	0.66	0.95	0.92	0.83	0.67	0.98	0.95	0.86	0.70	1.00	0.99	0.89	0.72	1.00	0.99	0.90	0.73
		ΔT	25	24	23	20	25	25	23	20	25	25	23	20	25	25	24	20	25	25	23	20	23	23	22	19
		kW	2.84	2.89	2.98	3.06	3.04	3.10	3.19	3.29	3.21	3.28	3.38	3.48	3.37	3.44	3.55	3.66	3.50	3.58	3.69	3.80	3.62	3.69	3.81	3.93
		Amps	10.7	11.0	11.4	11.8	11.6	11.9	12.3	12.7	12.6	12.9	13.3	13.8	13.4	13.8	14.2	14.8	14.3	14.7	15.1	15.7	15.2	15.5	16.0	16.6
		Hi PR	217	234	247	258	244	262	277	289	277	298	315	329	316	340	359	374	355	382	404	421	393	423	446	465
		Lo PR	105	112	122	130	111	118	129	137	115	123	134	143	121	129	141	150	127	135	147	157	131	140	153	162
	1400	MBh	40.1	40.9	42.8	45.6	39.1	39.9	41.8	44.6	38.2	39.0	40.8	43.5	37.3	38.0	39.8	42.5	35.4	36.1	37.8	40.3	32.8	33.4	35.0	37.4
		S/T	0.93	0.90	0.81	0.66	0.96	0.93	0.84	0.68	0.99	0.95	0.86	0.70	1.00	0.98	0.89	0.72	1.00	1.00	0.92	0.75	1.00	1.00	0.93	0.75
		ΔT	24	24	23	20	25	24	23	20	25	24	23	20	24	25	23	20	23	24	23	20	22	22	21	19
		kW	2.90	2.96	3.04	3.14	3.11	3.17	3.26	3.36	3.29	3.36	3.46	3.57	3.45	3.52	3.63	3.75	3.59	3.66	3.78	3.90	3.71	3.79	3.90	4.03
		Amps	11.0	11.3	11.7	12.1	11.9	12.2	12.6	13.1	12.9	13.3	13.7	14.2	13.8	14.2	14.6	15.2	14.7	15.1	15.6	16.2	15.6	16.0	16.5	17.1
		Hi PR	224	241	255	266	251	271	286	298	286	308	325	339	326	350	370	386	366	394	416	434	405	436	460	480
		Lo PR	108	115	126	134	114	122	133	141	119	126	138	147	125	133	145	154	131	139	152	162	135	144	157	167
	1575	MBh	41.3	42.1	44.1	47.0	40.3	41.1	43.0	45.9	39.4	40.1	42.0	44.8	38.4	39.1	41.0	43.7	36.5	37.2	38.9	41.5	33.8	34.4	36.1	38.5
		S/T	0.98	0.94	0.85	0.69	1.00	0.98	0.88	0.71	1.00	1.00	0.90	0.73	1.00	1.00	0.93	0.76	1.00	1.00	0.97	0.78	1.00	1.00	0.98	0.79
		ΔT	24	23	22	19	24	23	22	19	23	23	22	19	22	23	22	19	21	22	22	19	20	20	21	18
		kW	2.92	2.98	3.07	3.16	3.13	3.19	3.29	3.39	3.32	3.38	3.49	3.60	3.48	3.55	3.66	3.78	3.62	3.69	3.81	3.93	3.74	3.82	3.94	4.06
		Amps	11.1	11.4	11.8	12.2	12.0	12.3	12.7	13.2	13.1	13.4	13.8	14.3	14.0	14.3	14.8	15.3	14.8	15.2	15.7	16.3	15.7	16.1	16.7	17.3
		Hi PR	226	244	257	268	254	273	289	301	289	311	328	342	329	354	374	390	370	398	420	439	409	440	465	485
		Lo PR	109	116	127	135	116	123	134	143	120	128	139	149	126	134	146	156	132	141	154	163	137	145	159	169

IDB: Entering Indoor Dry Bulb Temperature
High and low pressures are measured at the liquid and suction service valves.

Shaded area reflects ARI conditions

Amps = outdoor unit amps (comp.+fan)
kW = Total system power

EXPANDED COOLING DATA — GSX130481A* / CA*F4860*6**

IDB	Airflow		Outdoor Ambient Temperature																							
			65ºF				75ºF				85ºF				95ºF				105ºF				115ºF			
			Entering Indoor Wet Bulb Temperature																							
			59	63	67	71	59	63	67	71	59	63	67	71	59	63	67	71	59	63	67	71	59	63	67	71
70	1800	MBh	45.1	46.7	51.2	-	44.0	45.6	50.0	-	43.0	44.5	48.8	-	41.9	43.5	47.6	-	39.8	41.3	45.2	-	36.9	38.2	41.9	-
		S/T	0.75	0.63	0.44	-	0.78	0.65	0.45	-	0.80	0.67	0.46	-	0.83	0.69	0.48	-	0.86	0.72	0.50	-	0.86	0.72	0.50	-
		ΔT	17	15	11	-	18	15	12	-	18	15	12	-	18	15	12	-	17	15	11	-	16	14	11	-
		kW	3.16	3.22	3.33	-	3.40	3.48	3.59	-	3.62	3.70	3.83	-	3.82	3.90	4.03	-	3.98	4.07	4.21	-	4.12	4.22	4.36	-
		Amps	11.6	11.9	12.3	-	12.5	12.9	13.3	-	13.7	14.0	14.5	-	14.6	15.0	15.5	-	15.6	16.0	16.5	-	16.5	17.0	17.5	-
		Hi PR	236	253	268	-	264	284	300	-	301	323	342	-	342	368	389	-	385	414	438	-	425	458	484	-
		Lo PR	110	117	128	-	116	124	135	-	121	129	140	-	127	135	147	-	133	142	155	-	138	146	160	-
	1600	MBh	43.8	45.4	49.7	-	42.7	44.3	48.5	-	41.7	43.2	47.4	-	40.7	42.2	46.2	-	38.7	40.1	43.9	-	35.8	37.1	40.7	-
		S/T	0.72	0.60	0.42	-	0.74	0.62	0.43	-	0.76	0.64	0.44	-	0.79	0.66	0.46	-	0.82	0.68	0.47	-	0.82	0.69	0.48	-
		ΔT	18	16	12	-	18	16	12	-	18	16	12	-	18	16	12	-	18	16	12	-	17	15	11	-
		kW	3.13	3.20	3.30	-	3.38	3.45	3.56	-	3.59	3.67	3.80	-	3.79	3.87	4.00	-	3.95	4.04	4.17	-	4.09	4.18	4.32	-
		Amps	11.5	11.8	12.1	-	12.4	12.7	13.2	-	13.5	13.9	14.3	-	14.5	14.8	15.4	-	15.4	15.8	16.4	-	16.4	16.8	17.4	-
		Hi PR	233	251	265	-	262	282	297	-	298	320	338	-	339	365	385	-	381	410	433	-	421	453	479	-
		Lo PR	109	116	127	-	115	123	134	-	120	127	139	-	126	134	146	-	132	140	153	-	136	145	158	-
	1400	MBh	40.4	41.9	45.9	-	39.5	40.9	44.8	-	38.5	39.9	43.7	-	37.6	38.9	42.7	-	35.7	37.0	40.5	-	33.1	34.3	37.5	-
		S/T	0.69	0.58	0.40	-	0.72	0.60	0.42	-	0.74	0.61	0.43	-	0.76	0.63	0.44	-	0.79	0.66	0.46	-	0.80	0.66	0.46	-
		ΔT	18	16	12	-	19	16	12	-	19	16	12	-	19	16	12	-	18	16	12	-	17	15	11	-
		kW	3.05	3.12	3.22	-	3.29	3.37	3.47	-	3.50	3.58	3.70	-	3.69	3.77	3.90	-	3.85	3.93	4.07	-	3.98	4.07	4.21	-
		Amps	11.2	11.4	11.8	-	12.1	12.4	12.8	-	13.1	13.5	13.9	-	14.1	14.4	14.9	-	15.0	15.4	15.9	-	15.9	16.3	16.9	-
		Hi PR	226	243	257	-	254	273	288	-	289	311	328	-	329	354	374	-	370	398	420	-	409	440	464	-
		Lo PR	106	112	123	-	112	119	130	-	116	124	135	-	122	130	142	-	128	136	148	-	132	141	154	-
75	1800	MBh	45.8	47.2	51.1	54.8	44.8	46.1	49.9	53.6	43.7	45.0	48.7	52.3	42.6	**43.9**	47.5	51.0	40.5	41.7	45.1	48.5	37.5	38.6	41.8	44.9
		S/T	0.86	0.77	0.58	0.37	0.89	0.79	0.60	0.39	0.91	0.81	0.62	0.40	0.94	**0.84**	0.64	0.41	0.97	0.87	0.66	0.42	0.98	0.88	0.67	0.43
		ΔT	20	18	15	10	20	19	15	11	20	19	15	11	20	**19**	15	11	20	19	15	11	19	17	14	10
		kW	3.18	3.25	3.36	3.47	3.43	3.51	3.62	3.75	3.65	3.74	3.86	3.99	3.85	**3.94**	4.07	4.21	4.02	4.11	4.25	4.39	4.16	4.26	4.40	4.55
		Amps	11.7	12.0	12.4	12.9	12.7	13.0	13.4	13.9	13.8	14.1	14.6	15.2	14.8	**15.1**	15.6	16.3	15.7	16.1	16.7	17.3	16.7	17.1	17.7	18.4
		Hi PR	238	256	270	282	267	287	303	316	304	327	345	360	346	**372**	393	410	389	419	442	461	430	463	488	509
		Lo PR	111	118	129	138	118	125	136	145	122	130	142	151	128	**136**	149	159	134	143	156	166	139	148	161	172
	1600	MBh	44.5	45.8	49.6	53.2	43.5	44.8	48.4	52.0	42.4	43.7	47.3	50.8	41.4	**42.6**	46.1	49.5	39.3	40.5	43.8	47.0	36.4	37.5	40.6	43.6
		S/T	0.82	0.73	0.55	0.36	0.85	0.76	0.57	0.37	0.87	0.78	0.59	0.38	0.90	**0.80**	0.61	0.39	0.93	0.83	0.63	0.40	0.94	0.84	0.63	0.41
		ΔT	21	19	16	11	21	19	16	11	21	19	16	11	21	**20**	16	11	21	19	16	11	20	18	15	10
		kW	3.16	3.22	3.33	3.44	3.40	3.48	3.59	3.71	3.62	3.71	3.83	3.96	3.82	**3.90**	4.04	4.17	3.98	4.07	4.21	4.36	4.12	4.22	4.36	4.51
		Amps	11.6	11.9	12.3	12.7	12.5	12.9	13.3	13.8	13.7	14.0	14.5	15.0	14.6	**15.0**	15.5	16.1	15.6	16.0	16.5	17.2	16.5	17.0	17.5	18.2
		Hi PR	236	253	268	279	264	284	300	313	301	323	342	356	342	**368**	389	406	385	415	438	457	426	458	484	504
		Lo PR	110	117	128	136	116	124	135	144	121	129	140	150	127	**135**	148	157	133	142	155	165	138	146	160	170
	1400	MBh	41.1	42.3	45.8	49.1	40.1	41.3	44.7	48.0	39.2	40.3	43.7	46.8	38.2	**39.3**	42.6	45.7	36.3	37.4	40.5	43.4	33.6	34.6	37.5	40.2
		S/T	0.79	0.70	0.53	0.34	0.82	0.73	0.55	0.36	0.84	0.75	0.57	0.36	0.86	**0.77**	0.58	0.38	0.90	0.80	0.61	0.39	0.90	0.81	0.61	0.39
		ΔT	21	20	16	11	22	20	16	11	22	20	16	11	22	**20**	16	11	21	20	16	11	20	18	15	10
		kW	3.08	3.15	3.25	3.35	3.32	3.39	3.50	3.62	3.53	3.61	3.73	3.86	3.72	**3.80**	3.93	4.07	3.88	3.97	4.10	4.24	4.02	4.11	4.25	4.40
		Amps	11.3	11.5	11.9	12.4	12.2	12.5	12.9	13.4	13.3	13.6	14.1	14.6	14.2	**14.6**	15.1	15.6	15.1	15.5	16.1	16.7	16.1	16.5	17.0	17.7
		Hi PR	228	246	260	271	256	276	291	304	292	314	331	346	332	**357**	377	394	374	402	425	443	413	444	469	489
		Lo PR	107	114	124	132	113	120	131	140	117	125	136	145	123	**131**	143	152	129	137	150	160	134	142	155	165

IDB: Entering Indoor Dry Bulb Temperature
High and low pressures are measured at the liquid and suction service valves.

Shaded area reflects ACCA (TVA) conditions

Amps = outdoor unit amps (comp.+fan)
kW = Total system power

EXPANDED COOLING DATA — GSX130481A* / CA*F4860*6*** (CONT.)

IDB	Airflow		Outdoor Ambient Temperature																							
			65ºF				75ºF				85ºF				95ºF				105ºF				115ºF			
			Entering Indoor Wet Bulb Temperature																							
			59	63	67	71	59	63	67	71	59	63	67	71	59	63	67	71	59	63	67	71	59	63	67	71
80	1800	MBh	46.7	47.7	50.9	54.4	45.6	46.6	49.7	53.2	44.5	45.5	48.6	51.9	43.4	44.3	47.4	50.6	41.2	42.1	45.0	48.1	38.2	39.0	41.7	44.6
		S/T	0.94	0.88	0.72	0.54	1.00	0.91	0.74	0.56	1.00	0.94	0.76	0.57	1.00	0.97	0.79	0.59	1.00	1.00	0.82	0.61	1.00	1.00	0.82	0.62
		ΔT	22	21	19	15	23	22	19	15	23	22	19	15	22	22	19	15	21	22	19	15	20	20	18	14
		kW	3.21	3.28	3.38	3.50	3.46	3.54	3.65	3.78	3.69	3.77	3.89	4.03	3.88	3.97	4.10	4.25	4.05	4.14	4.28	4.43	4.20	4.29	4.44	4.59
		Amps	11.8	12.1	12.5	13.0	12.8	13.1	13.5	14.1	13.9	14.3	14.8	15.3	14.9	15.3	15.8	16.4	15.9	16.3	16.8	17.5	16.9	17.3	17.9	18.6
		Hi PR	240	259	273	285	270	290	306	320	307	330	349	363	349	376	397	414	393	423	447	466	434	467	493	515
		Lo PR	112	120	130	139	119	126	138	147	123	131	143	153	130	138	150	160	136	144	158	168	140	149	163	174
	1600	MBh	45.3	46.3	49.5	52.9	44.2	45.2	48.3	51.6	43.2	44.1	47.2	50.4	42.1	43.1	**46.0**	49.2	40.0	40.9	43.7	46.7	37.1	37.9	40.5	43.3
		S/T	0.90	0.84	0.68	0.51	0.93	0.87	0.71	0.53	0.95	0.89	0.73	0.54	0.98	0.92	**0.75**	0.56	1.00	0.96	0.78	0.58	1.00	0.96	0.78	0.59
		ΔT	23	22	19	16	24	23	20	16	24	23	20	16	24	23	**20**	16	23	22	20	16	21	21	18	15
		kW	3.18	3.25	3.36	3.47	3.43	3.51	3.62	3.75	3.66	3.74	3.86	3.99	3.85	3.94	**4.07**	4.21	4.02	4.11	4.25	4.39	4.16	4.26	4.40	4.55
		Amps	11.7	12.0	12.4	12.9	12.7	13.0	13.4	13.9	13.8	14.1	14.6	15.2	14.8	15.1	**15.7**	16.3	15.7	16.1	16.7	17.3	16.7	17.1	17.7	18.4
		Hi PR	238	256	270	282	267	287	303	316	304	327	345	360	346	372	**393**	410	389	419	442	461	430	463	488	510
		Lo PR	111	118	129	138	118	125	136	145	122	130	142	151	128	136	**149**	159	134	143	156	166	139	148	162	172
	1400	MBh	41.8	42.7	45.6	48.8	40.8	41.7	44.6	47.7	39.9	40.7	43.5	46.5	38.9	39.7	42.5	45.4	36.9	37.8	40.3	43.1	34.2	35.0	37.4	39.9
		S/T	0.86	0.81	0.66	0.49	0.90	0.84	0.68	0.51	0.92	0.86	0.70	0.52	0.95	0.89	0.72	0.54	0.98	0.92	0.75	0.56	0.99	0.93	0.76	0.57
		ΔT	24	23	20	16	24	23	20	16	24	23	20	16	24	23	20	16	24	23	20	16	22	21	19	15
		kW	3.10	3.17	3.27	3.38	3.35	3.42	3.53	3.65	3.56	3.64	3.76	3.89	3.75	3.84	3.97	4.10	3.91	4.00	4.14	4.28	4.05	4.15	4.29	4.43
		Amps	11.4	11.6	12.0	12.5	12.3	12.6	13.0	13.5	13.4	13.7	14.2	14.7	14.3	14.7	15.2	15.8	15.3	15.7	16.2	16.8	16.2	16.6	17.2	17.9
		Hi PR	231	248	262	274	259	279	294	307	295	317	335	349	335	361	381	398	377	406	429	447	417	449	474	494
		Lo PR	108	115	125	133	114	121	132	141	118	126	138	147	124	132	145	154	130	139	151	161	135	144	157	167
85	1800	MBh	47.5	48.4	50.7	54.1	46.4	47.3	49.5	52.8	45.3	46.1	48.3	51.6	44.2	45.0	47.1	50.3	42.0	42.8	44.8	47.8	38.9	39.6	41.5	44.3
		S/T	0.98	0.95	0.86	0.70	1.00	0.98	0.89	0.72	1.00	1.00	0.91	0.74	1.00	1.00	0.94	0.76	1.00	1.00	0.98	0.79	1.00	1.00	0.98	0.80
		ΔT	24	23	22	19	24	24	22	19	23	24	22	19	23	23	23	20	21	22	22	19	20	20	21	18
		kW	3.23	3.30	3.41	3.53	3.49	3.57	3.69	3.81	3.72	3.80	3.93	4.06	3.92	4.01	4.14	4.28	4.09	4.18	4.32	4.47	4.23	4.33	4.48	4.63
		Amps	11.9	12.2	12.6	13.1	12.9	13.2	13.7	14.2	14.0	14.4	14.9	15.5	15.0	15.4	15.9	16.6	16.0	16.4	17.0	17.7	17.0	17.4	18.0	18.8
		Hi PR	243	261	276	288	272	293	309	323	310	333	352	367	353	380	401	418	397	427	451	470	439	472	498	520
		Lo PR	113	121	132	140	120	128	139	148	125	133	145	154	131	139	152	162	137	146	159	170	142	151	165	175
	1600	MBh	46.1	47.0	49.2	52.5	45.0	45.9	48.1	51.3	43.9	44.8	46.9	50.1	42.9	43.7	45.8	48.8	40.7	41.5	43.5	46.4	37.7	38.5	40.3	43.0
		S/T	0.94	0.91	0.82	0.66	0.97	0.94	0.85	0.69	1.00	0.96	0.87	0.71	1.00	0.99	0.90	0.73	1.00	1.00	0.93	0.76	1.00	1.00	0.94	0.76
		ΔT	25	24	23	20	25	25	23	20	25	25	23	20	25	25	24	20	23	24	23	20	22	22	22	19
		kW	3.21	3.28	3.38	3.50	3.46	3.54	3.65	3.78	3.69	3.77	3.89	4.03	3.88	3.97	4.10	4.25	4.05	4.14	4.28	4.43	4.20	4.29	4.44	4.59
		Amps	11.8	12.1	12.5	13.0	12.8	13.1	13.5	14.1	13.9	14.3	14.8	15.3	14.9	15.3	15.8	16.4	15.9	16.3	16.8	17.5	16.9	17.3	17.9	18.6
		Hi PR	240	259	273	285	270	290	306	320	307	330	349	363	349	376	397	414	393	423	447	466	434	467	493	515
		Lo PR	112	120	130	139	119	126	138	147	123	131	143	153	130	138	150	160	136	144	158	168	140	149	163	174
	1400	MBh	42.5	43.4	45.4	48.5	41.5	42.4	44.4	47.3	40.6	41.3	43.3	46.2	39.6	40.3	42.2	45.1	37.6	38.3	40.1	42.8	34.8	35.5	37.2	39.7
		S/T	0.91	0.87	0.79	0.64	0.94	0.91	0.82	0.66	0.96	0.93	0.84	0.68	0.99	0.96	0.86	0.70	1.00	0.99	0.90	0.73	1.00	1.00	0.91	0.73
		ΔT	25	25	24	20	26	25	24	21	26	25	24	21	26	25	24	21	25	25	24	20	23	23	22	19
		kW	3.13	3.20	3.30	3.41	3.38	3.45	3.56	3.68	3.59	3.67	3.79	3.92	3.78	3.87	4.00	4.14	3.95	4.04	4.17	4.32	4.09	4.18	4.32	4.47
		Amps	11.5	11.7	12.1	12.6	12.4	12.7	13.2	13.7	13.5	13.9	14.3	14.9	14.5	14.8	15.3	15.9	15.4	15.8	16.4	17.0	16.4	16.8	17.4	18.0
		Hi PR	233	251	265	276	262	281	297	310	297	320	338	353	339	365	385	402	381	410	433	452	421	453	479	499
		Lo PR	109	116	127	135	115	122	134	142	120	127	139	148	126	134	146	155	132	140	153	163	136	145	158	169

IDB: Entering Indoor Dry Bulb Temperature
High and low pressures are measured at the liquid and suction service valves.

Shaded area reflects ARI conditions

Amps = outdoor unit amps (comp.+fan)
kW = Total system power

EXPANDED COOLING DATA — GSX130481B* / CA*F4860*6B*

			Outdoor Ambient Temperature																							
			65ºF				75ºF				85ºF				95ºF				105ºF				115ºF			
			Entering Indoor Wet Bulb Temperature																							
IDB	Airflow		59	63	67	71	59	63	67	71	59	63	67	71	59	63	67	71	59	63	67	71	59	63	67	71
70	1400	MBh	40.4	41.9	45.9	-	39.5	40.9	44.8	-	38.5	39.9	43.7	-	37.6	38.9	42.7	-	35.7	37.0	40.5	-	33.1	34.3	37.5	-
		S/T	0.71	0.59	0.41	-	0.73	0.61	0.42	-	0.75	0.63	0.44	-	0.78	0.65	0.45	-	0.81	0.67	0.47	-	0.81	0.68	0.47	-
		ΔT	19	16	12	-	19	16	12	-	19	16	13	-	19	17	13	-	19	16	12	-	18	15	12	-
		kW	3.17	3.23	3.32	-	3.39	3.46	3.56	-	3.59	3.66	3.77	-	3.77	3.84	3.96	-	3.91	4.00	4.12	-	4.04	4.13	4.26	-
		Amps	11.6	11.9	12.3	-	12.6	12.9	13.3	-	13.7	14.0	14.5	-	14.6	15.0	15.5	-	15.5	15.9	16.5	-	16.5	16.9	17.4	-
		Hi PR	215	231	244	-	241	259	274	-	274	295	311	-	312	336	354	-	351	377	399	-	388	417	440	-
		Lo PR	104	111	121	-	110	117	128	-	115	122	133	-	120	128	140	-	126	134	146	-	130	139	151	-
	1600	MBh	43.8	45.4	49.7	-	42.7	44.3	48.5	-	41.7	43.2	47.4	-	40.7	42.2	46.2	-	38.7	40.1	43.9	-	35.8	37.1	40.7	-
		S/T	0.73	0.61	0.43	-	0.76	0.64	0.44	-	0.78	0.65	0.45	-	0.81	0.67	0.47	-	0.84	0.70	0.48	-	0.84	0.70	0.49	-
		ΔT	18	16	12	-	19	16	12	-	19	16	12	-	19	16	12	-	19	16	12	-	17	15	11	-
		kW	3.24	3.30	3.40	-	3.47	3.54	3.65	-	3.67	3.75	3.87	-	3.86	3.94	4.06	-	4.01	4.09	4.22	-	4.14	4.23	4.36	-
		Amps	12.0	12.3	12.7	-	12.9	13.2	13.7	-	14.1	14.4	14.9	-	15.0	15.4	15.9	-	16.0	16.4	16.9	-	16.9	17.4	17.9	-
		Hi PR	221	238	251	-	248	267	282	-	282	304	321	-	321	346	365	-	362	389	411	-	400	430	454	-
		Lo PR	108	114	125	-	114	121	132	-	118	126	137	-	124	132	144	-	130	138	151	-	134	143	156	-
	1800	MBh	45.1	46.7	51.2	-	44.0	45.6	50.0	-	43.0	44.5	48.8	-	41.9	43.5	47.6	-	39.8	41.3	45.2	-	36.9	38.2	41.9	-
		S/T	0.77	0.64	0.45	-	0.80	0.67	0.46	-	0.82	0.68	0.47	-	0.85	0.71	0.49	-	0.88	0.73	0.51	-	0.88	0.74	0.51	-
		ΔT	18	15	12	-	18	16	12	-	18	16	12	-	18	16	12	-	18	15	12	-	17	14	11	-
		kW	3.26	3.33	3.42	-	3.50	3.57	3.67	-	3.70	3.78	3.90	-	3.89	3.97	4.09	-	4.04	4.13	4.26	-	4.18	4.26	4.40	-
		Amps	12.1	12.4	12.8	-	13.0	13.4	13.8	-	14.2	14.5	15.0	-	15.2	15.5	16.0	-	16.1	16.5	17.1	-	17.1	17.5	18.1	-
		Hi PR	223	240	254	-	251	270	285	-	285	307	324	-	325	349	369	-	365	393	415	-	404	434	459	-
		Lo PR	109	116	126	-	115	122	133	-	119	127	139	-	125	133	146	-	131	140	152	-	136	144	158	-
75	1400	MBh	41.1	42.3	45.8	49.1	40.1	41.3	44.7	48.0	39.2	40.3	43.7	46.8	38.2	**39.3**	42.6	45.7	36.3	37.4	40.5	43.4	33.6	34.6	37.5	40.2
		S/T	0.81	0.72	0.55	0.35	0.83	0.75	0.56	0.36	0.86	0.77	0.58	0.37	0.88	**0.79**	0.60	0.38	0.92	0.82	0.62	0.40	0.92	0.83	0.63	0.40
		ΔT	22	20	16	11	22	20	17	11	22	20	17	11	22	**20**	17	12	22	20	16	11	20	19	15	11
		kW	3.19	3.25	3.35	3.45	3.42	3.49	3.59	3.70	3.62	3.69	3.80	3.92	3.79	**3.87**	3.99	4.12	3.95	4.03	4.15	4.29	4.08	4.16	4.29	4.43
		Amps	11.7	12.0	12.4	12.9	12.7	13.0	13.4	13.9	13.8	14.1	14.6	15.1	14.7	**15.1**	15.6	16.2	15.7	16.1	16.6	17.2	16.6	17.0	17.6	18.3
		Hi PR	217	233	246	257	243	262	276	288	277	298	314	328	315	**339**	358	373	354	381	403	420	391	421	445	464
		Lo PR	105	112	122	130	111	118	129	138	116	123	134	143	122	**129**	141	150	127	136	148	158	132	140	153	163
	1600	MBh	44.5	45.8	49.6	53.2	43.5	44.8	48.4	52.0	42.4	43.7	47.3	50.8	41.4	**42.6**	46.1	49.5	39.3	40.5	43.8	47.0	36.4	37.5	40.6	43.6
		S/T	0.84	0.75	0.57	0.36	0.87	0.77	0.59	0.38	0.89	0.79	0.60	0.39	0.92	**0.82**	0.62	0.40	0.95	0.85	0.64	0.41	0.96	0.86	0.65	0.42
		ΔT	21	20	16	11	22	20	16	11	22	20	16	11	22	**20**	16	11	21	20	16	11	20	18	15	10
		kW	3.26	3.33	3.42	3.53	3.50	3.57	3.68	3.79	3.70	3.78	3.90	4.02	3.89	**3.97**	4.09	4.22	4.04	4.13	4.26	4.39	4.18	4.26	4.40	4.54
		Amps	12.1	12.4	12.8	13.2	13.1	13.4	13.8	14.3	14.2	14.5	15.0	15.6	15.2	**15.5**	16.1	16.7	16.1	16.5	17.1	17.7	17.1	17.5	18.1	18.8
		Hi PR	223	240	254	265	251	270	285	297	285	307	324	338	325	**349**	369	385	365	393	415	433	404	434	459	478
		Lo PR	109	116	126	134	115	122	133	142	119	127	139	148	125	**133**	146	155	131	140	153	162	136	145	158	168
	1800	MBh	45.8	47.2	51.1	54.8	44.8	46.1	49.9	53.6	43.7	45.0	48.7	52.3	42.6	**43.9**	47.5	51.0	40.5	41.7	45.1	48.5	37.5	38.6	41.8	44.9
		S/T	0.88	0.78	0.59	0.38	0.91	0.81	0.61	0.40	0.93	0.83	0.63	0.41	0.96	**0.86**	0.65	0.42	1.00	0.89	0.67	0.43	1.00	0.90	0.68	0.44
		ΔT	21	19	15	11	21	19	16	11	21	19	16	11	21	**19**	16	11	21	19	16	11	19	18	15	10
		kW	3.29	3.35	3.45	3.55	3.52	3.59	3.70	3.82	3.73	3.81	3.93	4.05	3.92	**4.00**	4.12	4.26	4.07	4.16	4.29	4.43	4.21	4.30	4.44	4.58
		Amps	12.2	12.5	12.9	13.4	13.2	13.5	13.9	14.5	14.3	14.7	15.1	15.7	15.3	**15.7**	16.2	16.8	16.3	16.7	17.2	17.9	17.3	17.7	18.3	19.0
		Hi PR	226	243	256	267	253	272	288	300	288	310	327	341	328	**353**	373	389	369	397	419	437	408	439	463	483
		Lo PR	110	117	127	136	116	123	135	143	120	128	140	149	127	**135**	147	157	133	141	154	164	137	146	159	170

IDB: Entering Indoor Dry Bulb Temperature
High and low pressures are measured at the liquid and suction service valves.

Shaded area reflects ACCA (TVA) conditions

Amps = outdoor unit amps (comp.+fan)
kW = Total system power

EXPANDED COOLING DATA — GSX130481B* / CA*F4860*6B* (CONT.)

			Outdoor Ambient Temperature																							
			65ºF				75ºF				85ºF				95ºF				105ºF				115ºF			
			Entering Indoor Wet Bulb Temperature																							
IDB	Airflow		59	63	67	71	59	63	67	71	59	63	67	71	59	63	67	71	59	63	67	71	59	63	67	71
80	1400	MBh	41.8	42.7	45.6	48.8	40.8	41.7	44.6	47.7	39.9	40.7	43.5	46.5	38.9	39.7	42.5	45.4	36.9	37.8	40.3	43.1	34.2	35.0	37.4	39.9
		S/T	0.88	0.83	0.67	0.50	0.92	0.86	0.70	0.52	0.94	0.88	0.72	0.54	0.97	0.91	0.74	0.55	1.01	0.94	0.77	0.57	1.01	0.95	0.77	0.58
		ΔT	24	23	20	16	25	24	20	16	25	24	20	16	25	24	21	16	24	23	20	16	23	22	19	15
		kW	3.21	3.28	3.37	3.47	3.44	3.51	3.62	3.73	3.65	3.72	3.83	3.95	3.82	3.90	4.03	4.15	3.98	4.06	4.19	4.32	4.11	4.20	4.33	4.47
		Amps	11.9	12.1	12.5	13.0	12.8	13.1	13.6	14.1	13.9	14.3	14.7	15.3	14.9	15.2	15.8	16.3	15.8	16.2	16.8	17.4	16.8	17.2	17.8	18.5
		Hi PR	219	236	249	259	246	264	279	291	279	301	317	331	318	342	362	377	358	385	407	424	395	426	449	469
		Lo PR	106	113	124	132	112	120	131	139	117	124	136	145	123	131	143	152	129	137	149	159	133	142	155	165
	1600	MBh	45.3	46.3	49.5	52.9	44.2	45.2	48.3	51.6	43.2	44.1	47.2	50.4	42.1	43.1	**46.0**	49.2	40.0	40.9	43.7	46.7	37.1	37.9	40.5	43.3
		S/T	0.92	0.86	0.70	0.52	0.95	0.89	0.72	0.54	0.97	0.91	0.74	0.56	1.00	0.94	**0.77**	0.57	1.00	0.98	0.80	0.60	1.00	0.99	0.80	0.60
		ΔT	24	23	20	16	24	23	20	16	24	23	20	16	24	23	**20**	16	23	23	20	16	21	21	19	15
		kW	3.29	3.35	3.45	3.56	3.52	3.59	3.70	3.82	3.73	3.81	3.93	4.05	3.92	4.00	**4.12**	4.26	4.07	4.16	4.29	4.43	4.21	4.30	4.44	4.58
		Amps	12.2	12.5	12.9	13.4	13.2	13.5	13.9	14.5	14.3	14.7	15.2	15.7	15.3	15.7	**16.2**	16.8	16.3	16.7	17.3	17.9	17.3	17.7	18.3	19.0
		Hi PR	226	243	256	267	253	272	288	300	288	310	327	341	328	353	**373**	389	369	397	419	437	408	439	463	483
		Lo PR	110	117	127	136	116	123	135	143	120	128	140	149	127	135	**147**	157	133	141	154	164	137	146	159	170
	1800	MBh	46.7	47.7	50.9	54.4	45.6	46.6	49.7	53.2	44.5	45.5	48.6	51.9	43.4	44.3	47.4	50.6	41.2	42.1	45.0	48.1	38.2	39.0	41.7	44.6
		S/T	0.96	0.90	0.73	0.55	1.00	0.93	0.76	0.57	1.00	0.96	0.78	0.58	1.00	1.00	0.80	0.60	1.00	1.00	0.83	0.62	1.00	1.00	0.84	0.63
		ΔT	23	22	19	15	23	22	19	15	23	22	19	15	22	23	19	16	21	22	19	15	20	20	18	14
		kW	3.31	3.38	3.48	3.58	3.55	3.62	3.73	3.85	3.76	3.84	3.96	4.08	3.95	4.03	4.16	4.29	4.11	4.19	4.33	4.47	4.24	4.33	4.47	4.62
		Amps	12.3	12.6	13.0	13.5	13.3	13.6	14.1	14.6	14.4	14.8	15.3	15.9	15.4	15.8	16.4	17.0	16.4	16.8	17.4	18.1	17.4	17.9	18.5	19.2
		Hi PR	228	245	259	270	256	275	291	303	291	313	331	345	331	356	376	393	373	401	423	442	412	443	468	488
		Lo PR	111	118	129	137	117	125	136	145	122	129	141	151	128	136	148	158	134	143	156	166	139	147	161	171
85	1400	MBh	42.5	43.4	45.4	48.5	41.5	42.4	44.4	47.3	40.6	41.3	43.3	46.2	39.6	40.3	42.2	45.1	37.6	38.3	40.1	42.8	34.8	35.5	37.2	39.7
		S/T	0.93	0.89	0.81	0.65	0.96	0.93	0.84	0.68	0.98	0.95	0.86	0.70	1.00	0.98	0.88	0.72	1.00	1.00	0.92	0.74	1.00	1.00	0.93	0.75
		ΔT	26	25	24	21	26	26	24	21	26	26	24	21	26	26	25	21	25	25	24	21	23	23	23	20
		kW	3.24	3.30	3.40	3.50	3.47	3.54	3.65	3.76	3.67	3.75	3.86	3.99	3.85	3.94	4.06	4.19	4.01	4.09	4.22	4.36	4.14	4.23	4.36	4.50
		Amps	12.0	12.2	12.6	13.1	12.9	13.2	13.7	14.2	14.0	14.4	14.9	15.4	15.0	15.4	15.9	16.5	16.0	16.4	16.9	17.6	16.9	17.4	17.9	18.6
		Hi PR	221	238	251	262	248	267	282	294	282	304	321	334	321	346	365	381	361	389	411	428	399	430	454	473
		Lo PR	108	114	125	133	114	121	132	140	118	126	137	146	124	132	144	153	130	138	151	161	134	143	156	166
	1600	MBh	46.1	47.0	49.2	52.5	45.0	45.9	48.1	51.3	43.9	44.8	46.9	50.1	42.9	43.7	45.8	48.8	40.7	41.5	43.5	46.4	37.7	38.5	40.3	43.0
		S/T	0.96	0.93	0.84	0.68	1.00	0.96	0.87	0.70	1.00	0.98	0.89	0.72	1.00	1.00	0.92	0.74	1.00	1.00	0.95	0.77	1.00	1.00	0.96	0.78
		ΔT	25	25	24	20	26	25	24	21	25	25	24	21	25	25	24	21	23	24	24	21	22	22	22	19
		kW	3.31	3.38	3.48	3.58	3.55	3.62	3.73	3.85	3.76	3.84	3.96	4.08	3.95	4.03	4.16	4.29	4.11	4.19	4.33	4.47	4.24	4.33	4.47	4.62
		Amps	12.3	12.6	13.0	13.5	13.3	13.6	14.1	14.6	14.4	14.8	15.3	15.9	15.4	15.8	16.4	17.0	16.4	16.8	17.4	18.1	17.4	17.9	18.5	19.2
		Hi PR	228	245	259	270	256	275	291	303	291	313	331	345	331	356	376	393	373	401	423	442	412	443	468	488
		Lo PR	111	118	129	137	117	125	136	145	122	129	141	151	128	136	148	158	134	143	156	166	139	147	161	171
	1800	MBh	47.5	48.4	50.7	54.1	46.4	47.3	49.5	52.8	45.3	46.1	48.3	51.6	44.2	45.0	47.1	50.3	42.0	42.8	44.8	47.8	38.9	39.6	41.5	44.3
		S/T	1.00	0.97	0.88	0.71	1.00	1.00	0.91	0.74	1.00	1.00	0.93	0.76	1.00	1.00	0.96	0.78	1.00	1.00	1.00	0.81	1.00	1.00	1.00	0.82
		ΔT	24	24	23	20	24	24	23	20	23	24	23	20	23	23	23	20	21	22	23	20	20	20	21	18
		kW	3.34	3.40	3.50	3.61	3.58	3.65	3.76	3.88	3.79	3.87	3.99	4.11	3.98	4.06	4.19	4.32	4.14	4.23	4.36	4.50	4.28	4.37	4.51	4.65
		Amps	12.4	12.7	13.1	13.6	13.4	13.7	14.2	14.7	14.6	14.9	15.4	16.0	15.6	16.0	16.5	17.1	16.6	17.0	17.6	18.2	17.6	18.0	18.6	19.3
		Hi PR	230	248	262	273	258	278	294	306	294	316	334	348	335	360	380	397	376	405	428	446	416	448	473	493
		Lo PR	112	119	130	138	118	126	137	146	123	131	143	152	129	137	150	160	135	144	157	167	140	149	163	173

IDB: Entering Indoor Dry Bulb Temperature
High and low pressures are measured at the liquid and suction service valves.

Shaded area reflects ARI conditions

Amps = outdoor unit amps (comp.+fan)
kW = Total system power

EXPANDED COOLING DATA — GSX130601A* / CA*F4860*6**

			Outdoor Ambient Temperature																							
			65ºF				75ºF				85ºF				95ºF				105ºF				115ºF			
			Entering Indoor Wet Bulb Temperature																							
IDB	Airflow		59	63	67	71	59	63	67	71	59	63	67	71	59	63	67	71	59	63	67	71	59	63	67	71
70	1913	MBh	55.9	57.9	63.4	-	54.6	56.5	62.0	-	53.3	55.2	60.5	-	52.0	53.9	59.0	-	49.4	51.2	56.1	-	45.7	47.4	51.9	-
		S/T	0.70	0.59	0.41	-	0.73	0.61	0.42	-	0.75	0.62	0.43	-	0.77	0.64	0.45	-	0.80	0.67	0.46	-	0.81	0.67	0.47	-
		ΔT	19	16	12	-	19	17	13	-	19	17	13	-	19	17	13	-	19	16	12	-	18	15	12	-
		kW	3.98	4.06	4.19	-	4.28	4.37	4.51	-	4.55	4.65	4.79	-	4.78	4.89	5.05	-	4.98	5.09	5.26	-	5.16	5.27	5.45	-
		Amps	14.8	15.2	15.7	-	16.1	16.5	17.0	-	17.5	18.0	18.6	-	18.8	19.2	19.9	-	20.0	20.5	21.2	-	21.2	21.8	22.5	-
		Hi PR	233	251	265	-	262	281	297	-	297	320	338	-	339	365	385	-	381	410	433	-	421	453	479	-
		Lo PR	102	108	118	-	108	115	125	-	112	119	130	-	118	125	137	-	123	131	143	-	127	136	148	-
	1700	MBh	54.2	56.2	61.6	-	53.0	54.9	60.1	-	51.7	53.6	58.7	-	50.4	52.3	57.3	-	47.9	49.7	54.4	-	44.4	46.0	50.4	-
		S/T	0.67	0.56	0.39	-	0.69	0.58	0.40	-	0.71	0.60	0.41	-	0.74	0.61	0.43	-	0.76	0.64	0.44	-	0.77	0.64	0.45	-
		ΔT	20	17	13	-	20	17	13	-	20	17	13	-	20	17	13	-	20	17	13	-	18	16	12	-
		kW	3.95	4.03	4.15	-	4.25	4.34	4.47	-	4.51	4.61	4.76	-	4.74	4.85	5.01	-	4.94	5.05	5.22	-	5.11	5.23	5.40	-
		Amps	14.7	15.0	15.6	-	15.9	16.3	16.9	-	17.3	17.8	18.4	-	18.6	19.1	19.7	-	19.8	20.3	21.0	-	21.0	21.6	22.3	-
		Hi PR	231	248	262	-	259	279	294	-	295	317	335	-	335	361	381	-	377	406	429	-	417	449	474	-
		Lo PR	101	107	117	-	107	113	124	-	111	118	129	-	116	124	135	-	122	130	142	-	126	134	147	-
	1488	MBh	50.1	51.9	56.8	-	48.9	50.7	55.5	-	47.7	49.5	54.2	-	46.6	48.3	52.9	-	44.2	45.8	50.2	-	41.0	42.5	46.5	-
		S/T	0.65	0.54	0.37	-	0.67	0.56	0.39	-	0.69	0.57	0.40	-	0.71	0.59	0.41	-	0.74	0.61	0.43	-	0.74	0.62	0.43	-
		ΔT	20	17	13	-	20	18	13	-	20	18	13	-	20	18	13	-	20	17	13	-	19	16	12	-
		kW	3.85	3.93	4.05	-	4.14	4.23	4.36	-	4.40	4.49	4.64	-	4.63	4.73	4.88	-	4.82	4.93	5.09	-	4.99	5.10	5.26	-
		Amps	14.3	14.6	15.1	-	15.5	15.9	16.4	-	16.9	17.3	17.9	-	18.1	18.5	19.2	-	19.3	19.7	20.4	-	20.4	21.0	21.7	-
		Hi PR	224	241	254	-	251	270	285	-	286	307	325	-	325	350	370	-	366	394	416	-	404	435	460	-
		Lo PR	98	104	114	-	103	110	120	-	108	114	125	-	113	120	131	-	118	126	137	-	122	130	142	-
75	1913	MBh	56.8	58.5	63.3	67.9	55.5	57.1	61.8	66.4	54.2	55.8	60.4	64.8	52.8	**54.4**	58.9	63.2	50.2	51.7	55.9	60.0	46.5	47.9	51.8	55.6
		S/T	0.80	0.71	0.54	0.35	0.83	0.74	0.56	0.36	0.85	0.76	0.57	0.37	0.88	**0.78**	0.59	0.38	0.91	0.81	0.62	0.40	0.92	0.82	0.62	0.40
		ΔT	22	20	16	11	22	20	17	12	22	20	17	12	22	**21**	17	12	22	20	17	11	21	19	15	11
		kW	4.01	4.09	4.22	4.36	4.31	4.41	4.55	4.69	4.58	4.68	4.84	4.99	4.82	**4.93**	5.09	5.26	5.03	5.14	5.31	5.48	5.20	5.32	5.49	5.68
		Amps	15.0	15.3	15.9	16.5	16.2	16.6	17.2	17.9	17.7	18.1	18.8	19.5	18.9	**19.4**	20.1	20.9	20.2	20.7	21.4	22.3	21.5	22.0	22.8	23.7
		Hi PR	235	253	268	279	264	284	300	313	301	323	342	356	342	**368**	389	406	385	414	438	456	425	458	483	504
		Lo PR	103	110	120	127	109	116	126	135	113	120	131	140	119	**126**	138	147	125	132	145	154	129	137	150	159
	1700	MBh	55.1	56.8	61.5	66.0	53.9	55.5	60.0	64.4	52.6	54.1	58.6	62.9	51.3	**52.8**	57.2	61.4	48.7	50.2	54.3	58.3	45.1	46.5	50.3	54.0
		S/T	0.76	0.68	0.52	0.33	0.79	0.71	0.53	0.34	0.81	0.72	0.55	0.35	0.84	**0.75**	0.57	0.36	0.87	0.78	0.59	0.38	0.88	0.78	0.59	0.38
		ΔT	23	21	17	12	23	21	17	12	23	21	17	12	23	**21**	17	12	23	21	17	12	21	20	16	11
		kW	3.98	4.06	4.19	4.32	4.28	4.37	4.51	4.66	4.55	4.65	4.80	4.95	4.78	**4.89**	5.05	5.22	4.98	5.09	5.26	5.44	5.16	5.27	5.45	5.63
		Amps	14.8	15.2	15.7	16.3	16.1	16.5	17.0	17.7	17.5	18.0	18.6	19.3	18.8	**19.2**	19.9	20.7	20.0	20.5	21.2	22.1	21.3	21.8	22.6	23.4
		Hi PR	233	251	265	276	262	282	297	310	298	320	338	353	339	**365**	385	402	381	410	433	452	421	453	479	499
		Lo PR	102	108	118	126	108	115	125	133	112	119	130	139	118	**125**	137	146	123	131	143	152	128	136	148	158
	1488	MBh	50.9	52.4	56.7	60.9	49.7	51.2	55.4	59.5	48.5	50.0	54.1	58.1	47.3	**48.8**	52.8	56.6	45.0	46.3	50.1	53.8	41.7	42.9	46.4	49.8
		S/T	0.73	0.66	0.50	0.32	0.76	0.68	0.52	0.33	0.78	0.70	0.53	0.34	0.81	**0.72**	0.55	0.35	0.84	0.75	0.57	0.36	0.84	0.75	0.57	0.37
		ΔT	23	21	17	12	23	22	18	12	23	22	18	12	24	**22**	18	12	23	21	18	12	22	20	16	11
		kW	3.88	3.96	4.09	4.22	4.18	4.27	4.40	4.54	4.44	4.53	4.68	4.83	4.67	**4.77**	4.92	5.08	4.86	4.97	5.13	5.30	5.03	5.14	5.31	5.49
		Amps	14.4	14.8	15.3	15.9	15.6	16.0	16.6	17.2	17.0	17.4	18.0	18.8	18.2	**18.7**	19.3	20.1	19.4	19.9	20.6	21.4	20.6	21.2	21.9	22.8
		Hi PR	226	243	257	268	254	273	288	301	289	311	328	342	329	**354**	374	390	370	398	420	438	409	440	464	484
		Lo PR	99	105	115	122	105	111	121	129	109	116	126	134	114	**121**	133	141	120	127	139	148	124	132	144	153

IDB: Entering Indoor Dry Bulb Temperature
High and low pressures are measured at the liquid and suction service valves.

Shaded area reflects ACCA (TVA) conditions

Amps = outdoor unit amps (comp.+fan)
kW = Total system power

EXPANDED COOLING DATA — GSX130601A* / CA*F4860*6*** (CONT.)

			Outdoor Ambient Temperature																							
			65°F				75°F				85°F				95°F				105°F				115°F			
			Entering Indoor Wet Bulb Temperature																							
IDB	Airflow		59	63	67	71	59	63	67	71	59	63	67	71	59	63	67	71	59	63	67	71	59	63	67	71
80	1913	MBh	57.8	59.1	63.1	67.5	56.5	57.7	61.6	65.9	55.1	56.3	60.2	64.3	53.8	55.0	58.7	62.8	51.1	52.2	55.8	59.6	47.3	48.4	51.7	55.2
		S/T	0.88	0.82	0.67	0.50	0.91	0.85	0.69	0.52	0.93	0.87	0.71	0.53	0.96	0.90	0.73	0.55	1.00	0.94	0.76	0.57	1.00	0.94	0.77	0.57
		ΔT	24	23	20	16	25	24	21	16	25	24	21	16	25	24	21	17	25	23	20	16	23	22	19	15
		kW	4.04	4.13	4.25	4.39	4.35	4.44	4.58	4.73	4.62	4.72	4.88	5.04	4.86	4.97	5.13	5.30	5.07	5.18	5.35	5.53	5.24	5.36	5.54	5.73
		Amps	15.1	15.5	16.0	16.6	16.4	16.8	17.4	18.0	17.9	18.3	18.9	19.7	19.1	19.6	20.3	21.1	20.4	20.9	21.6	22.5	21.7	22.2	23.0	23.9
		Hi PR	238	256	270	282	267	287	303	316	304	327	345	360	346	372	393	410	389	419	442	461	430	462	488	509
		Lo PR	104	111	121	129	110	117	128	136	114	122	133	141	120	128	139	148	126	134	146	156	130	138	151	161
	1700	MBh	56.1	57.4	61.3	65.5	54.8	56.0	59.9	64.0	53.5	54.7	58.4	62.5	52.2	53.4	**57.0**	60.9	49.6	50.7	54.2	57.9	45.9	46.9	50.2	53.6
		S/T	0.84	0.78	0.64	0.48	0.87	0.81	0.66	0.49	0.89	0.83	0.68	0.51	0.92	0.86	**0.70**	0.52	0.95	0.89	0.73	0.54	0.96	0.90	0.73	0.55
		ΔT	25	24	21	17	26	25	21	17	26	25	21	17	26	25	**22**	17	26	24	21	17	24	23	20	16
		kW	4.01	4.09	4.22	4.36	4.31	4.41	4.55	4.70	4.58	4.68	4.84	5.00	4.82	4.93	**5.09**	5.26	5.03	5.14	5.31	5.48	5.20	5.32	5.49	5.68
		Amps	15.0	15.3	15.9	16.5	16.2	16.6	17.2	17.9	17.7	18.1	18.8	19.5	18.9	19.4	**20.1**	20.9	20.2	20.7	21.4	22.3	21.5	22.0	22.8	23.7
		Hi PR	236	253	268	279	264	284	300	313	301	323	342	356	342	368	**389**	406	385	414	438	456	426	458	484	504
		Lo PR	103	110	120	127	109	116	126	135	113	120	131	140	119	126	**138**	147	125	132	145	154	129	137	150	159
	1488	MBh	51.8	52.9	56.6	60.5	50.6	51.7	55.2	59.1	49.4	50.5	53.9	57.6	48.2	49.2	52.6	56.2	45.8	46.8	50.0	53.4	42.4	43.3	46.3	49.5
		S/T	0.81	0.76	0.62	0.46	0.84	0.78	0.64	0.48	0.86	0.80	0.65	0.49	0.88	0.83	0.67	0.50	0.92	0.86	0.70	0.52	0.93	0.87	0.71	0.53
		ΔT	26	25	22	17	26	25	22	17	26	25	22	17	26	25	22	18	26	25	22	17	24	23	20	16
		kW	3.91	4.00	4.12	4.25	4.21	4.30	4.44	4.58	4.47	4.57	4.72	4.87	4.70	4.81	4.96	5.13	4.90	5.01	5.17	5.35	5.07	5.18	5.35	5.53
		Amps	14.5	14.9	15.4	16.0	15.8	16.2	16.7	17.4	17.2	17.6	18.2	18.9	18.4	18.9	19.5	20.3	19.6	20.1	20.8	21.6	20.8	21.4	22.1	23.0
		Hi PR	228	246	260	271	256	276	291	304	292	314	331	346	332	357	377	394	374	402	424	443	413	444	469	489
		Lo PR	100	106	116	124	106	112	123	131	110	117	127	136	115	123	134	143	121	129	140	149	125	133	145	155
85	1913	MBh	58.8	60.0	62.8	67.0	57.5	58.6	61.3	65.4	56.1	57.2	59.9	63.9	54.7	55.8	58.4	62.3	52.0	53.0	55.5	59.2	48.2	49.1	51.4	54.8
		S/T	0.92	0.89	0.80	0.65	0.95	0.92	0.83	0.67	0.98	0.94	0.85	0.69	1.00	0.97	0.88	0.71	1.00	1.00	0.91	0.74	1.00	1.00	0.92	0.75
		ΔT	26	26	24	21	26	26	24	21	26	26	24	21	26	26	25	21	25	25	24	21	23	24	23	20
		kW	4.07	4.16	4.29	4.43	4.38	4.48	4.62	4.77	4.66	4.76	4.92	5.08	4.90	5.01	5.18	5.35	5.11	5.22	5.40	5.58	5.29	5.41	5.59	5.78
		Amps	15.2	15.6	16.2	16.8	16.5	16.9	17.5	18.2	18.0	18.5	19.1	19.9	19.3	19.8	20.5	21.3	20.6	21.1	21.9	22.7	21.9	22.4	23.2	24.1
		Hi PR	240	259	273	285	270	290	306	320	307	330	348	363	349	376	397	414	393	423	446	466	434	467	493	514
		Lo PR	105	112	122	130	111	118	129	137	115	123	134	143	121	129	141	150	127	135	148	157	131	140	153	163
	1700	MBh	57.1	58.2	61.0	65.0	55.8	56.9	59.6	63.5	54.5	55.5	58.1	62.0	53.1	54.2	56.7	60.5	50.5	51.4	53.9	57.5	46.7	47.7	49.9	53.2
		S/T	0.88	0.85	0.76	0.62	0.91	0.88	0.79	0.64	0.93	0.90	0.81	0.66	0.96	0.93	0.84	0.68	1.00	0.96	0.87	0.70	1.00	0.97	0.88	0.71
		ΔT	27	27	25	22	27	27	25	22	27	27	25	22	28	27	26	22	27	27	25	22	25	25	24	20
		kW	4.04	4.13	4.25	4.39	4.35	4.44	4.58	4.73	4.62	4.72	4.88	5.04	4.86	4.97	5.13	5.30	5.07	5.18	5.35	5.53	5.24	5.36	5.54	5.73
		Amps	15.1	15.5	16.0	16.6	16.4	16.8	17.4	18.0	17.9	18.3	18.9	19.7	19.1	19.6	20.3	21.1	20.4	20.9	21.6	22.5	21.7	22.2	23.0	23.9
		Hi PR	238	256	270	282	267	287	303	316	304	327	345	360	346	372	393	410	389	419	442	461	430	462	488	509
		Lo PR	104	111	121	129	110	117	128	136	114	122	133	141	120	128	139	148	126	134	146	156	130	138	151	161
	1488	MBh	52.7	53.7	56.3	60.0	51.5	52.5	55.0	58.6	50.3	51.2	53.7	57.2	49.0	50.0	52.3	55.8	46.6	47.5	49.7	53.1	43.1	44.0	46.1	49.1
		S/T	0.85	0.82	0.74	0.60	0.88	0.85	0.76	0.62	0.90	0.87	0.78	0.63	0.93	0.89	0.81	0.65	0.96	0.93	0.84	0.68	0.97	0.94	0.84	0.69
		ΔT	28	27	26	22	28	27	26	22	28	27	26	22	28	28	26	23	28	27	26	22	26	25	24	21
		kW	3.94	4.03	4.15	4.28	4.24	4.33	4.47	4.62	4.51	4.61	4.75	4.91	4.74	4.85	5.00	5.17	4.94	5.05	5.22	5.39	5.11	5.23	5.40	5.58
		Amps	14.7	15.0	15.6	16.2	15.9	16.3	16.9	17.5	17.3	17.8	18.4	19.1	18.6	19.1	19.7	20.5	19.8	20.3	21.0	21.9	21.0	21.6	22.3	23.2
		Hi PR	231	248	262	273	259	279	294	307	294	317	335	349	335	361	381	397	377	406	429	447	417	449	474	494
		Lo PR	101	107	117	125	107	113	124	132	111	118	129	137	116	124	135	144	122	130	142	151	126	134	147	156

IDB: Entering Indoor Dry Bulb Temperature
High and low pressures are measured at the liquid and suction service valves.

Shaded area reflects ARI conditions

Amps = outdoor unit amps (comp.+fan)
kW = Total system power

ARI PERFORMANCE RATINGS

Outdoor Unit	Indoor Units		Cooling Capacity (BTU/h)				ARI #
	Indoor Coil & Blower	Furnace	Total	Sensible	SEER[1]	EER[2]	
GSX13 0181A*	ACNF18XX16A*		17,200	12,400	13.00	11.00	3001408
	ADPF182416A*		18,000	13,000	13.00	11.00	1332751
	ADPF182416B*		18,000	13,000	13.00	11.00	1443913
	AEPF183016A*		18,000	13,000	14.00	11.60	1332752
	AEPF183016B*		18,000	13,000	14.00	11.60	1487018
	AR*F182416A*		18,000	13,000	13.00	11.00	1333014
	AR*F182416B*		18,000	13,000	13.00	11.00	1443931
	AT*F182416A*		18,000	13,000	13.00	11.00	1483520
	AWUF18XX16A*		17,400	12,500	13.00	11.00	3001409
	CA*F1824*6A*	G*E80704B**	18,000	13,000	14.00	11.60	1332753
	CA*F1824*6A*	G*V80704B**	18,000	13,000	14.00	11.60	1332754
	CA*F1824*6A*	G*V90704C**	18,000	13,000	14.00	11.60	1332755
	CA*F1824*6A*	G*V950453B**	18,000	13,000	14.00	11.60	1332756
	CA*F1824*6A*+EEP		18,000	13,000	13.00	11.00	1332757
	CA*F1824*6A*+MBE1200**-1		18,400	13,200	14.00	11.60	1332758
	CA*F1824*6B*	G*E80704B**	18,000	13,000	14.00	11.60	1333161
	CA*F1824*6B*	G*V80704B**	18,000	13,000	14.00	11.60	1333162
	CA*F1824*6B*	G*V90704C**	18,000	13,000	14.00	11.60	1333163
	CA*F1824*6B*	G*V950453B**	18,000	13,000	14.00	11.60	1333164
	CA*F1824*6B*+EEP		18,000	13,000	13.00	11.00	1333165
	CA*F1824*6B*+MBE1200**-1		18,400	13,200	14.00	11.60	1333152
	CA*F1824*6C*	G*E80704B**	18,000	13,000	14.00	11.60	1386209
	CA*F1824*6C*	G*V80704B**	18,000	13,000	14.00	11.60	1386210
	CA*F1824*6C*	G*V90704C**	18,000	13,000	14.00	11.60	1386211
	CA*F1824*6C*	G*V950453B**	18,000	13,000	14.00	11.60	1386212
	CA*F1824*6C*+EEP		18,000	13,000	13.00	11.00	1401019
	CA*F1824*6C*+EEP		18,000	13,000	13.00	11.00	1401043
	CA*F1824*6C*+MBE1200**-1		18,400	13,200	14.00	11.60	1386221
	CHPF1824A6A*+EEP		18,000	13,000	13.00	11.00	1333006
	CHPF1824A6B*+EEP		18,000	13,000	13.00	11.00	1332759
	CHPF2430B6A*	G*E80704B**	18,400	13,200	14.00	11.60	1332760
	CHPF2430B6A*	G*V80704B**	18,400	13,200	14.00	11.60	1332761
	CHPF2430B6A*	G*V950453B**	18,400	13,200	14.00	11.60	1332762
	CHPF2430B6A*+MBE1200**-1		18,400	13,200	14.00	11.60	1333015
	CHPF2430B6B*	G*E80704B**	18,400	13,200	14.00	11.60	1332763
	CHPF2430B6B*	G*V80704B**	18,400	13,200	14.00	11.60	1332764
	CHPF2430B6B*	G*V950453B**	18,400	13,200	14.00	11.60	1332765
	CHPF2430B6B*+MBE1200**-1A*		18,400	13,200	14.00	11.60	1333153
	CSCF1824N6A*	G*E80704B**	18,000	13,000	14.00	11.60	1332766
	CSCF1824N6A*	G*V80704B**	18,000	13,000	14.00	11.60	1332767
	CSCF1824N6A*	G*V90704C**	18,000	13,000	14.00	11.60	1332768

[1] Seasonal Energy Efficiency Ratio; Certified per ARI 210/240 @ 80°F/ 67°F/ 95°F

[2] Energy Efficiency Ratio @ 80°F/ 67°F/ 95°F

ARI PERFORMANCE RATINGS (CONT.)

Outdoor Unit	Indoor Units		Cooling Capacity (BTU/h)				ARI #
	Indoor Coil & Blower	Furnace	Total	Sensible	SEER[1]	EER[2]	
GSX13 0181A* (cont.)	CSCF1824N6A*	G*V950453B**	18,000	13,000	14.00	11.60	1332769
	CSCF1824N6A*+EEP		18,000	13,000	13.00	11.00	1333007
	CSCF1824N6B*	G*E80704B**	18,000	13,000	14.00	11.60	1333016
	CSCF1824N6B*	G*V80704B**	18,000	13,000	14.00	11.60	1333017
	CSCF1824N6B*	G*V90704C**	18,000	13,000	14.00	11.60	1333018
	CSCF1824N6B*	G*V950453B**	18,000	13,000	14.00	11.60	1333019
	CSCF1824N6B*+EEP		18,000	13,000	13.00	11.00	1333020
	CT*F1824*6A*	G*E80704B**	18,000	13,000	14.00	11.60	1449780
	CT*F1824*6A*	G*V80704B**	18,000	13,000	14.00	11.60	1449781
	CT*F1824*6A*	G*V90704C**	18,000	13,000	14.00	11.60	1449782
	CT*F1824*6A*	G*V950453B**	18,000	13,000	14.00	11.60	1449783
	CT*F1824*6A*+EEP		18,000	13,000	13.00	11.00	1449784
	CT*F1824*6A*+MBE1200**-1		18,400	13,200	14.00	11.60	1449785
GSX13 0181B*	ACNF18XX16A*		17,200	12,400	13.0	11.0	3080551
	ADPF182416B*		18,000	13,000	13.0	11.0	3080552
	AEPF183016C*		18,000	13,000	14.0	11.6	3080553
	AR*F182416B*		18,000	13,000	13.0	11.0	3080554
	ASPF183016B*		19,000	13,700	14.0	12.2	3080555
	AT*F182416A*		18,000	13,000	13.0	11.0	3080556
	AWUF18XX16A*		17,400	12,500	13.0	11.0	3080557
	CA*F1824*6B*	G*V950453B**	18,000	13,000	14.0	11.6	3080558
	CA*F1824*6B*	G*V80704B**	18,000	13,000	14.0	11.6	3080559
	CA*F1824*6B*	G*V90704C**	18,000	13,000	14.0	11.6	3080560
	CA*F1824*6B*	G*E80704B**	18,000	13,000	14.0	11.6	3080561
	CA*F1824*6B*+EEP		18,000	13,000	13.0	11.0	3080562
	CA*F1824*6B*+MBE1200**-1		18,400	13,200	14.0	11.6	3080563
	CHPF1824A6B*+EEP		18,000	13,000	13.0	11.0	3080564
	CHPF2430B6B*	G*V80704B**	18,400	13,200	14.0	11.6	3080566
	CHPF2430B6B*	G*E80704B**	18,400	13,200	14.0	11.6	3080567
	CHPF2430B6B*	G*V950453B**	18,400	13,200	14.0	11.6	3080568
	CHPF2430B6B*+EEP		18,000	13,000	13.0	11.0	3080565
	CHPF2430B6B*+MBE1200**-1A*		18,400	13,200	14.0	11.6	3080569
	CSCF1824N6B*	G*V950453B**	18,000	13,000	14.0	11.6	3080570
	CSCF1824N6B*	G*V90704C**	18,000	13,000	14.0	11.6	3080571
	CSCF1824N6B*	G*V80704B**	18,000	13,000	14.0	11.6	3080572
	CSCF1824N6B*	G*E80704B**	18,000	13,000	14.0	11.6	3080573
	CSCF1824N6B*+EEP		18,000	13,000	13.0	11.0	3080574
	CT*F1824*6A*	G*E80704B**	18,000	13,000	14.0	11.6	3080575
	CT*F1824*6A*	G*V950453B**	18,000	13,000	14.0	11.6	3080576
	CT*F1824*6A*	G*V80704B**	18,000	13,000	14.0	11.6	3080577
	CT*F1824*6A*+EEP		18,000	13,000	13.0	11.0	3080578
	CT*F1824*6A*+MBE1200**-1		18,400	13,200	14.0	11.6	3080579

See Notes on Page 29.

ARI Performance Ratings (cont.)

Outdoor Unit	Indoor Units		Cooling Capacity (BTU/h)				ARI #
	Indoor Coil & Blower	Furnace	Total	Sensible	SEER[1]	EER[2]	
GSX13 0241A*	ACNF24XX16A*		23,000	16,800	13.00	11.00	3001412
	ADPF182416A*		23,000	16,800	13.00	11.00	1332770
	ADPF182416B*		23,000	16,800	13.00	11.00	1443914
	AEPF183016A*		23,400	17,100	14.00	11.60	1332771
	AEPF183016B*		23,400	17,100	14.00	11.60	1487019
	AR*F182416A*		23,000	16,800	13.00	11.00	1333021
	AR*F182416B*		23,000	16,800	13.00	11.00	1443932
	ASPF183016A*		23,400	17,100	14.00	11.60	1333022
	ASPF183016B*		23,400	17,100	14.00	11.60	1492494
	AT*F182416A*		23,000	16,800	13.00	11.00	1483521
	AWUF24XX16A*		23,000	16,800	13.00	11.00	3001410
	AWUF30XX16A*		23,200	16,900	13.00	11.00	3001411
	CA*F1824*6A*	G*E80704B**	23,000	16,800	14.00	11.60	1332772
	CA*F1824*6A*	G*V80704B**	23,000	16,800	14.00	11.60	1332773
	CA*F1824*6A*	G*V950453B**	23,000	16,800	14.00	11.60	1332774
	CA*F1824*6A*	G*V950704C**	23,000	16,800	14.00	11.60	1332775
	CA*F1824*6A*+EEP		23,000	16,800	13.00	11.00	1332776
	CA*F1824*6A*+MBE1200**-1		23,000	16,800	14.00	11.60	1332777
	CA*F1824*6B*	G*E80704B**	23,000	16,800	14.00	11.60	1333166
	CA*F1824*6B*	G*V80704B**	23,000	16,800	14.00	11.60	1333167
	CA*F1824*6B*	G*V950453B**	23,000	16,800	14.00	11.60	1333168
	CA*F1824*6B*	G*V950704C**	23,000	16,800	14.00	11.60	1333169
	CA*F1824*6B*+EEP		23,000	16,800	13.00	11.00	1333170
	CA*F1824*6B*+MBE1200**-1		23,000	16,800	14.00	11.60	1333154
	CA*F1824*6C*	G*E80704B**	23,000	16,800	14.00	11.60	1386213
	CA*F1824*6C*	G*V80704B**	23,000	16,800	14.00	11.60	1386214
	CA*F1824*6C*	G*V950453B**	23,000	16,800	14.00	11.60	1386215
	CA*F1824*6C*	G*V950704C**	23,000	16,800	14.00	11.60	1386216
	CA*F1824*6C*+EEP		23,000	16,800	13.00	11.00	1401044
	CA*F1824*6C*+EEP		23,000	16,800	13.00	11.00	1401020
	CA*F1824*6C*+MBE1200**-1		23,000	16,800	14.00	11.60	1386222
	CHPF1824A6A*+EEP		23,000	16,800	13.00	11.00	1333008
	CHPF1824A6B*+EEP		23,000	16,800	13.00	11.00	1332778
	CHPF2430B6A*	G*E80704B**	23,400	17,100	14.00	11.60	1332779
	CHPF2430B6A*	G*V80704B**	23,400	17,100	14.00	11.60	1332780
	CHPF2430B6A*	G*V950453B**	23,400	17,100	14.00	11.60	1332781
	CHPF2430B6A*+MBE1200**-1		23,400	17,100	14.00	11.60	1333023
	CHPF2430B6B*	G*E80704B**	23,400	17,100	14.00	11.60	1332782
	CHPF2430B6B*	G*V80704B**	23,400	17,100	14.00	11.60	1332783
	CHPF2430B6B*	G*V950453B**	23,400	17,100	14.00	11.60	1332784
	CHPF2430B6B*+MBE1200**-1A*		23,400	17,100	14.00	11.60	1333155

See Notes on Page 29.

ARI PERFORMANCE RATINGS (CONT.)

Outdoor Unit	Indoor Units		Cooling Capacity (BTU/h)				ARI #
	Indoor Coil & Blower	Furnace	Total	Sensible	SEER[1]	EER[2]	
GSX13 0241A* (cont.)	CSCF1824N6A*	G*E80704B**	23,000	16,800	13.00	11.00	1332785
	CSCF1824N6A*	G*V80704B**	23,000	16,800	13.00	11.00	1332786
	CSCF1824N6A*	G*V90704C**	23,000	16,800	14.00	11.60	1332787
	CSCF1824N6A*	G*V950453B**	23,000	16,800	14.00	11.60	1332788
	CSCF1824N6A*+EEP		23,000	16,800	13.00	11.00	1333009
	CSCF1824N6B*	G*E80704B**	23,000	16,800	13.00	11.00	1333024
	CSCF1824N6B*	G*V80704B**	23,000	16,800	13.00	11.00	1333025
	CSCF1824N6B*	G*V90704C**	23,000	16,800	14.00	11.60	1333026
	CSCF1824N6B*	G*V950453B**	23,000	16,800	14.00	11.60	1333027
	CSCF1824N6B*+EEP		23,000	16,800	13.00	11.00	1333028
	CT*F1824*6A*	G*E80704B**	23,000	16,800	14.00	11.60	1449786
	CT*F1824*6A*	G*V80704B**	23,000	16,800	14.00	11.60	1449787
	CT*F1824*6A*	G*V950453B**	23,000	16,800	14.00	11.60	1449788
	CT*F1824*6A*	G*V950704C**	23,000	16,800	14.00	11.60	1449789
	CT*F1824*6A*+EEP		23,000	16,800	13.00	11.00	1449790
	CT*F1824*6A*+MBE1200**-1		23,000	16,800	14.00	11.60	1449791
GSX13 0241B*	ACNF24XX16A*		23,000	16,800	13.0	11.0	3080580
	ADPF182416B*		23,000	16,800	13.0	11.0	3080581
	AEPF183016C*		23,400	17,100	14.0	11.6	3080582
	AR*F182416B*		23,000	16,800	13.0	11.0	3080583
	ASPF183016B*		23,400	17,100	14.0	11.6	3080584
	AT*F182416A*		23,000	16,800	13.0	11.0	3080585
	AWUF24XX16A*		23,000	16,800	13.0	11.0	3080586
	AWUF30XX16A*		23,200	16,900	13.0	11.0	3080587
	CA*F1824*6B*	G*V950453B**	23,000	16,800	14.0	11.6	3080588
	CA*F1824*6B*	G*E80704B**	23,000	16,800	14.0	11.6	3080589
	CA*F1824*6B*	G*V950704C**	23,000	16,800	14.0	11.6	3080590
	CA*F1824*6B*	G*V80704B**	23,000	16,800	14.0	11.6	3080591
	CA*F1824*6B*+EEP		23,000	16,800	13.0	11.0	3080592
	CA*F1824*6B*+MBE1200**-1		23,000	16,800	14.0	11.6	3080593
	CHPF1824A6B*+EEP		23,000	16,800	13.0	11.0	3080594
	CHPF2430B6B*	G*E80704B**	23,400	17,100	14.0	11.6	3080595
	CHPF2430B6B*	G*V950453B**	23,400	17,100	14.0	11.6	3080596
	CHPF2430B6B*	G*V80704B**	23,400	17,100	14.0	11.6	3080597
	CHPF2430B6B*+EEP		23,000	16,800	13.0	11.0	3080610
	CHPF2430B6B*+MBE1200**-1A*		23,400	17,100	14.0	11.6	3080598

[1] Seasonal Energy Efficiency Ratio; Certified per ARI 210/240 @ 80°F/ 67°F/ 95°F [2] Energy Efficiency Ratio @ 80°F/ 67°F/ 95°F

Notes

- Always check the S&R plate for electrical data on the unit being installed.
- When matching the outdoor unit to the indoor unit, use the piston supplied with the outdoor unit or that specified on the piston kit chart supplied with the indoor unit.
- EEP - Order from Service Dept. Part No. B13707-38 or new Solid State Board B13707-35S. Part No. B13707-38 is not interchangeable with B13707-35S. The Goodman Gas Furnace contains the EEP cooling time delay

ARI PERFORMANCE RATINGS (CONT.)

Outdoor Unit	Indoor Units		Cooling Capacity (BTU/h)				ARI #
	Indoor Coil & Blower	Furnace	Total	Sensible	SEER[1]	EER[2]	
GSX13 0241B* (cont.)	CSCF1824N6B*	G*V80704B**	23,000	16,800	13.0	11.0	3080599
	CSCF1824N6B*	G*V90704C**	23,000	16,800	14.0	11.6	3080600
	CSCF1824N6B*	G*E80704B**	23,000	16,800	13.0	11.0	3080601
	CSCF1824N6B*	G*V950453B**	23,000	16,800	14.0	11.6	3080602
	CSCF1824N6B*+EEP		23,000	16,800	13.0	11.0	3080603
	CT*F1824*6A*	G*E80704B**	23,000	16,800	14.0	11.6	3080604
	CT*F1824*6A*	G*V80704B**	23,000	16,800	14.0	11.6	3080605
	CT*F1824*6A*	G*V950704C**	23,000	16,800	14.0	11.6	3080606
	CT*F1824*6A*	G*V950453B**	23,000	16,800	14.0	11.6	3080607
	CT*F1824*6A*+EEP		23,000	16,800	13.0	11.0	3080608
	CT*F1824*6A*+MBE1200**-1		23,000	16,800	14.0	11.6	3080609
GSX13 0301A*	ACNF30XX16A*		27,600	20,400	13.00	11.00	3001413
	ADPF304216A*		28,400	21,000	13.00	11.00	1332917
	ADPF304216B*		28,400	21,000	13.00	11.00	1492495
	AEPF183016A*		28,400	21,000	14.00	11.60	1332918
	AEPF183016B*		28,400	21,000	14.00	11.60	1487020
	AR*F182416A*+TXV		27,400	20,300	13.00	11.00	1411921
	AR*F182416B*+TXV		27,400	20,300	13.00	11.00	1443947
	AR*F303016A*		28,400	21,000	13.00	11.00	1333029
	AR*F303016B*		28,400	21,000	13.00	11.00	1492496
	ASPF183016A*		28,400	21,000	14.00	11.60	1333030
	ASPF183016B*		28,400	21,000	14.00	11.60	1492497
	AT*F182416A*+TXV		27,400	20,300	13.00	11.00	1483487
	AT*F303016A*		28,400	21,000	13.00	11.00	1483511
	AWUF30XX16A*		27,600	20,400	13.00	11.00	3001414
	AWUF36XX16A*		27,800	20,600	13.00	11.00	3001415
	AWUF37XX16A*		28,000	20,700	13.00	11.00	3001416
	CA*F3030*6A*	G*E80704B**	28,400	21,000	13.50	11.30	1332919
	CA*F3030*6A*	G*V80704B**	28,400	21,000	13.50	11.30	1332920
	CA*F3030*6A*	G*V90704C**	28,400	21,000	14.00	11.60	1332921
	CA*F3030*6A*	G*V950453B**	28,400	21,000	14.00	11.60	1332922
	CA*F3030*6A*	G*V950704C**	28,400	21,000	14.00	11.60	1332923
	CA*F3030*6A*+EEP		28,400	21,000	13.00	11.00	1333010
	CA*F3030*6B*	G*E80704B**	28,400	21,000	13.50	11.30	1333171
	CA*F3030*6B*	G*V80704B**	28,400	21,000	13.50	11.30	1333172
	CA*F3030*6B*	G*V90704C**	28,400	21,000	14.00	11.60	1333173
	CA*F3030*6B*	G*V950453B**	28,400	21,000	14.00	11.60	1333174
	CA*F3030*6B*	G*V950704C**	28,400	21,000	14.00	11.60	1333175
	CA*F3030*6B*+EEP		28,400	21,000	13.00	11.00	1333176
	CA*F3131*6A*	G*E80704B**	28,600	21,200	14.00	11.60	1332924
	CA*F3131*6A*	G*V80704B**	28,600	21,200	14.00	11.60	1332925
	CA*F3131*6A*	G*V90704C**	28,600	21,200	14.00	11.60	1332926

See Notes on Page 29.

ARI PERFORMANCE RATINGS (CONT.)

Outdoor Unit	Indoor Units		Cooling Capacity (BTU/h)				ARI #
	Indoor Coil & Blower	Furnace	Total	Sensible	SEER[1]	EER[2]	
GSX13 0301A* (cont.)	CA*F3131*6A*	G*V950453B**	28,600	21,200	14.00	11.60	1332927
	CA*F3131*6A*	G*V950704C**	28,600	21,200	14.00	11.60	1332928
	CA*F3131*6A*+EEP		28,600	21,200	13.00	11.00	1332929
	CA*F3131*6A*+MBE1200**-1		28,400	21,000	14.00	11.60	1332930
	CA*F3131*6B*	G*E80704B**	28,600	21,200	14.00	11.60	1333177
	CA*F3131*6B*	G*V80704B**	28,600	21,200	14.00	11.60	1333178
	CA*F3131*6B*	G*V90704C**	28,600	21,200	14.00	11.60	1333179
	CA*F3131*6B*	G*V950453B**	28,600	21,200	14.00	11.60	1333180
	CA*F3131*6B*	G*V950704C**	28,600	21,200	14.00	11.60	1333181
	CA*F3131*6B*+EEP		28,600	21,200	13.00	11.00	1333182
	CA*F3131*6B*+MBE1200**-1		28,400	21,000	14.00	11.60	1333156
	CA*F3131*6C*	G*E80704B**	28,600	21,200	14.00	11.60	1386224
	CA*F3131*6C*	G*V80704B**	28,600	21,200	14.00	11.60	1386225
	CA*F3131*6C*	G*V90704C**	28,600	21,200	14.00	11.60	1386226
	CA*F3131*6C*	G*V950453B**	28,600	21,200	14.00	11.60	1386227
	CA*F3131*6C*	G*V950704C**	28,600	21,200	14.00	11.60	1386228
	CA*F3131*6C*+EEP		28,600	21,200	13.00	11.00	1386230
	CA*F3131*6C*+MBE1200**-1		28,400	21,000	14.00	11.60	1386231
	CHPF2430B6A*	G*E80704B**	28,400	21,000	14.00	11.60	1332931
	CHPF2430B6A*	G*V80704B**	28,400	21,000	14.00	11.60	1332932
	CHPF2430B6A*	G*V90704C**	28,400	21,000	14.00	11.60	1332933
	CHPF2430B6A*	G*V950453B**	28,400	21,000	14.00	11.60	1332934
	CHPF2430B6A*+EEP		28,400	21,000	13.00	11.00	1333011
	CHPF2430B6A*+MBE1200**-1		28,400	21,000	14.00	11.60	1333031
	CHPF2430B6B*	G*E80704B**	28,400	21,000	14.00	11.60	1332935
	CHPF2430B6B*	G*V80704B**	28,400	21,000	14.00	11.60	1332936
	CHPF2430B6B*	G*V90704C**	28,400	21,000	14.00	11.60	1332937
	CHPF2430B6B*	G*V950453B**	28,400	21,000	14.00	11.60	1332938
	CHPF2430B6B*+EEP		28,400	21,000	13.00	11.00	1332939
	CHPF2430B6B*+MBE1200**-1A*		28,400	21,000	14.00	11.60	1333229
	CSCF3036N6A*	G*E80704B**	28,400	21,000	14.00	11.60	1332940
	CSCF3036N6A*	G*V80704B**	28,400	21,000	14.00	11.60	1332941
	CSCF3036N6A*	G*V90704C**	28,400	21,000	14.00	11.60	1332942
	CSCF3036N6A*	G*V950453B**	28,400	21,000	14.00	11.60	1332943
	CSCF3036N6A*+EEP		28,400	21,000	13.00	11.00	1332944
	CSCF3036N6B*	G*E80704B**	28,400	21,000	14.00	11.60	1333032
	CSCF3036N6B*	G*V80704B**	28,400	21,000	14.00	11.60	1333033
	CSCF3036N6B*	G*V90704C**	28,400	21,000	14.00	11.60	1333034
	CSCF3036N6B*	G*V950453B**	28,400	21,000	14.00	11.60	1333035
	CSCF3036N6B*+EEP		28,400	21,000	13.00	11.00	1333036
	CT*F3030*6A*	G*E80704B**	28,400	21,000	13.50	11.30	1449792

See Notes on Page 29.

ARI PERFORMANCE RATINGS (CONT.)

Outdoor Unit	Indoor Units		Cooling Capacity (BTU/h)				ARI #
	Indoor Coil & Blower	Furnace	Total	Sensible	SEER[1]	EER[2]	
GSX13 0301A* (cont.)	CT*F3030*6A*	G*V80704B**	28,400	21,000	13.50	11.30	1449793
	CT*F3030*6A*	G*V90704C**	28,400	21,000	14.00	11.60	1449794
	CT*F3030*6A*	G*V950453B**	28,400	21,000	14.00	11.60	1449795
	CT*F3030*6A*	G*V950704C**	28,400	21,000	14.00	11.60	1449796
	CT*F3030*6A*+EEP		28,400	21,000	13.00	11.00	1449797
	CT*F3131*6A*	G*E80704B**	28,600	21,200	14.00	11.60	1449798
	CT*F3131*6A*	G*V80704B**	28,600	21,200	14.00	11.60	1449799
	CT*F3131*6A*	G*V90704C**	28,600	21,200	14.00	11.60	1449800
	CT*F3131*6A*	G*V950453B**	28,600	21,200	14.00	11.60	1449801
	CT*F3131*6A*	G*V950704C**	28,600	21,200	14.00	11.60	1449802
	CT*F3131*6A*+EEP		28,600	21,200	13.00	11.00	1449803
	CT*F3131*6A*+MBE1200**-1		28,400	21,000	14.00	11.60	1449804
GSX13 0361A*	ADPF304216A*		35,000	25,200	13.00	11.00	1332945
	ADPF304216B*		35,000	25,200	13.00	11.00	1492498
	AEPF303616A*		35,000	25,200	14.00	11.60	1332946
	AEPF303616B*		35,000	25,200	14.00	11.60	1487021
	AEPF303616C*		35,000	25,200	14.00	11.60	1443923
	AR*F363616A*		34,400	24,800	13.00	11.00	1438784
	AR*F363616B*		34,400	24,800	13.00	11.00	1492499
	AR*F364216A*		35,000	25,200	13.00	11.00	1333037
	AR*F364216B*		35,000	25,200	13.00	11.00	1483000
	ASPF303616A*		35,000	25,200	14.00	11.60	1333038
	ASPF303616B*		35,000	25,200	14.00	11.60	1443943
	AT*F363616A*		34,400	24,800	13.00	11.00	1483512
	AT*F364216A*		35,000	25,200	13.00	11.00	1483522
	AWUF36XX16A*		33,400	24,000	13.00	11.00	3001417
	AWUF37XX16A*		34,000	24,500	13.00	11.00	3001418
	CA*F3636*6A*	G*E80704B**	35,000	25,200	13.50	11.30	1332947
	CA*F3636*6A*	G*E80905C**	35,000	25,200	13.50	11.30	1332948
	CA*F3636*6A*	G*V80704B**	35,000	25,200	13.50	11.30	1332949
	CA*F3636*6A*	G*V80905C**	35,000	25,200	13.50	11.30	1332950
	CA*F3636*6A*	G*V90905D**	35,000	25,200	13.50	11.30	1332951
	CA*F3636*6A*	G*V950905D**	35,000	25,200	13.50	11.30	1332952
	CA*F3636*6A*	G*V951155D**	35,000	25,200	13.50	11.30	1332953
	CA*F3636*6A*+EEP		35,000	25,200	13.00	11.00	1332954
	CA*F3636*6B*	G*E80704B**	35,000	25,200	13.50	11.30	1333183
	CA*F3636*6B*	G*E80905C**	35,000	25,200	13.50	11.30	1333184
	CA*F3636*6B*	G*V80704B**	35,000	25,200	13.50	11.30	1333185
	CA*F3636*6B*	G*V80905C**	35,000	25,200	13.50	11.30	1333186
	CA*F3636*6B*	G*V90905D**	35,000	25,200	13.50	11.30	1333187
	CA*F3636*6B*	G*V950905D**	35,000	25,200	13.50	11.30	1333188

See Notes on Page 29.

ARI Performance Ratings (cont.)

Outdoor Unit	Indoor Units		Cooling Capacity (BTU/h)				ARI #
	Indoor Coil & Blower	Furnace	Total	Sensible	SEER[1]	EER[2]	
GSX13 0361A* (cont.)	CA*F3636*6B*	G*V951155D**	35,000	25,200	13.50	11.30	1333189
	CA*F3636*6B*+EEP		35,000	25,200	13.00	11.00	1333190
	CA*F3642*6A*	G*E80704B**	35,400	25,500	14.00	11.60	1332955
	CA*F3642*6A*	G*E80905C**	35,400	25,500	14.00	11.60	1332956
	CA*F3642*6A*	G*V80704B**	35,400	25,500	14.00	11.60	1332957
	CA*F3642*6A*	G*V80905C**	35,400	25,500	14.00	11.60	1332958
	CA*F3642*6A*	G*V90905D**	35,400	25,500	14.00	11.60	1332959
	CA*F3642*6A*	G*V950905D**	35,400	25,500	14.00	11.60	1332960
	CA*F3642*6A*	G*V951155D**	35,400	25,500	14.00	11.60	1332961
	CA*F3642*6A*+MBE1600**-1		35,400	25,500	14.00	11.60	1332962
	CA*F3642*6B*	G*E80704B**	35,400	25,500	14.00	11.60	1333191
	CA*F3642*6B*	G*E80905C**	35,400	25,500	14.00	11.60	1333192
	CA*F3642*6B*	G*V80704B**	35,400	25,500	14.00	11.60	1333193
	CA*F3642*6B*	G*V80905C**	35,400	25,500	14.00	11.60	1333194
	CA*F3642*6B*	G*V90905D**	35,400	25,500	14.00	11.60	1333195
	CA*F3642*6B*	G*V950905D**	35,400	25,500	14.00	11.60	1333196
	CA*F3642*6B*	G*V951155D**	35,400	25,500	14.00	11.60	1333197
	CA*F3642*6B*+MBE1600**-1		35,400	25,500	14.00	11.60	1333198
	CHPF3636B6A*	G*E80704B**	35,000	25,200	13.50	11.30	1332963
	CHPF3636B6A*	G*V80704B**	35,000	25,200	13.50	11.30	1332964
	CHPF3636B6A*+EEP		35,400	25,500	13.00	11.00	1332965
	CHPF3636B6B*	G*E80704B**	35,000	25,200	13.50	11.30	1332966
	CHPF3636B6B*	G*V80704B**	35,000	25,200	13.50	11.30	1332967
	CHPF3636B6B*+EEP		35,400	25,500	13.00	11.00	1332968
	CHPF3642C6A*	G*E80905C**	35,000	25,200	14.00	11.60	1332969
	CHPF3642C6A*	G*V80905C**	35,000	25,200	14.00	11.60	1332970
	CHPF3642C6A*+EEP		35,400	25,500	13.00	11.00	1332972
	CHPF3642C6A*+MBE1600**-1		35,400	25,500	14.00	11.60	1332971
	CHPF3642C6B*	G*E80905C**	35,000	25,200	14.00	11.60	1332973
	CHPF3642C6B*	G*V80905C**	35,000	25,200	14.00	11.60	1332974
	CHPF3642C6B*+EEP		35,400	25,500	13.00	11.00	1332976
	CHPF3642C6B*+MBE1600**-1		35,400	25,500	14.00	11.60	1332975
	CHPF3642D6A*	G*V90905D**	35,000	25,200	14.00	11.60	1332977
	CHPF3642D6A*	G*V950905D**	35,000	25,200	14.00	11.60	1332978
	CHPF3642D6A*	G*V951155D**	35,000	25,200	14.00	11.60	1332979
	CHPF3642D6A*+EEP		35,400	25,500	13.00	11.00	1332980
	CHPF3642D6B*	G*V90905D**	35,000	25,200	14.00	11.60	1332981
	CHPF3642D6B*	G*V950905D**	35,000	25,200	14.00	11.60	1332982
	CHPF3642D6B*	G*V951155D**	35,000	25,200	14.00	11.60	1332983
	CHPF3642D6B*+EEP		35,400	25,500	13.00	11.00	1332984
	CSCF3036N6A*	G*V80704B**	35,000	25,200	13.50	11.30	1332985

See Notes on Page 29.

ARI Performance Ratings (cont.)

Outdoor Unit	Indoor Units		Cooling Capacity (BTU/h)				ARI #
	Indoor Coil & Blower	Furnace	Total	Sensible	SEER[1]	EER[2]	
GSX13 0361A* (cont.)	CSCF3036N6A*+EEP		35,000	25,200	13.00	11.00	1332986
	CSCF3036N6B*	G*V80704B**	35,000	25,200	13.50	11.30	1333039
	CSCF3036N6B*+EEP		35,000	25,200	13.00	11.00	1333040
	CSCF3642N6A*	G*E80704B**	35,400	25,500	14.00	11.60	1332987
	CSCF3642N6A*	G*E80905C**	35,400	25,500	14.00	11.60	1332988
	CSCF3642N6A*	G*V80704B**	35,400	25,500	14.00	11.60	1332989
	CSCF3642N6A*	G*V80905C**	35,400	25,500	14.00	11.60	1332990
	CSCF3642N6A*	G*V90905D**	35,400	25,500	14.00	11.60	1332991
	CSCF3642N6A*	G*V950905D**	35,400	25,500	14.00	11.60	1332992
	CSCF3642N6A*	G*V951155D**	35,400	25,500	14.00	11.60	1332993
	CSCF3642N6A*+EEP		35,400	25,500	13.00	11.00	1332994
	CSCF3642N6C*	G*E80704B**	35,400	25,500	14.00	11.60	1332995
	CSCF3642N6C*	G*E80905C**	35,400	25,500	14.00	11.60	1332996
	CSCF3642N6C*	G*V80704B**	35,400	25,500	14.00	11.60	1332997
	CSCF3642N6C*	G*V80905C**	35,400	25,500	14.00	11.60	1333041
	CSCF3642N6C*	G*V90905D**	35,400	25,500	14.00	11.60	1332998
	CSCF3642N6C*	G*V950905D**	35,400	25,500	14.00	11.60	1332999
	CSCF3642N6C*	G*V951155D**	35,400	25,500	14.00	11.60	1333000
	CSCF3642N6C*+EEP		35,400	25,500	13.00	11.00	1333042
	CT*F3636*6A*	G*E80704B**	35,000	25,200	13.50	11.30	1449805
	CT*F3636*6A*	G*E80905C**	35,000	25,200	13.50	11.30	1449806
	CT*F3636*6A*	G*V80704B**	35,000	25,200	13.50	11.30	1449807
	CT*F3636*6A*	G*V80905C**	35,000	25,200	13.50	11.30	1449808
	CT*F3636*6A*	G*V90905D**	35,000	25,200	13.50	11.30	1449809
	CT*F3636*6A*	G*V950905D**	35,000	25,200	13.50	11.30	1449810
	CT*F3636*6A*	G*V951155D**	35,000	25,200	13.50	11.30	1449811
	CT*F3636*6A*+EEP		35,000	25,200	13.00	11.00	1449812
	CT*F3642*6A*	G*E80704B**	35,400	25,500	14.00	11.60	1449813
	CT*F3642*6A*	G*E80905C**	35,400	25,500	14.00	11.60	1449814
	CT*F3642*6A*	G*V80704B**	35,400	25,500	14.00	11.60	1449815
	CT*F3642*6A*	G*V80905C**	35,400	25,500	14.00	11.60	1449816
	CT*F3642*6A*	G*V90905D**	35,400	25,500	14.00	11.60	1449817
	CT*F3642*6A*	G*V950905D**	35,400	25,500	14.00	11.60	1449818
	CT*F3642*6A*	G*V951155D**	35,400	25,500	14.00	11.60	1449819
	CT*F3642*6A*+MBE1600**-1		35,400	25,500	14.00	11.60	1449820
GSX13 0421A*	ADPF304216A*		40,000	29,200	13.00	11.10	1332789
	ADPF304216B*		40,000	29,200	13.00	11.10	1492500
	AEPF426016A*		41,000	29,900	14.00	11.60	1332790
	AEPF426016B*		41,000	29,900	14.00	11.60	1487022
	AR*F364216A*		40,000	29,200	13.00	11.10	1333043
	AR*F364216B*		40,000	29,200	13.00	11.10	1486994

See Notes on Page 37.

ARI Performance Ratings (cont.)

Outdoor Unit	Indoor Units		Cooling Capacity (BTU/h)				ARI #
	Indoor Coil & Blower	Furnace	Total	Sensible	SEER[1]	EER[2]	
GSX13 0421A* (cont.)	ASPF426016A*		41,000	29,900	14.00	11.60	1333044
	ASPF426016B*		41,000	29,900	14.00	11.60	1492501
	AT*F364216A*		40,000	29,200	13.00	11.10	1483523
	CA*F3642*6A*	G*E80905C**	40,000	29,200	13.50	11.30	1332791
	CA*F3642*6A*	G*V80905C**	40,000	29,200	13.50	11.30	1332792
	CA*F3642*6A*	G*V81155C**	40,000	29,200	13.50	11.30	1332793
	CA*F3642*6A*+EEP		40,000	29,200	13.00	11.10	1332794
	CA*F3642*6B*	G*E80905C**	40,000	29,200	13.50	11.30	1333199
	CA*F3642*6B*	G*V80905C**	40,000	29,200	13.50	11.30	1333200
	CA*F3642*6B*	G*V81155C**	40,000	29,200	13.50	11.30	1333201
	CA*F3642*6B*+EEP		40,000	29,200	13.00	11.10	1333202
	CA*F4860*6A*	G*E80905C**	41,000	29,900	14.00	11.60	1332795
	CA*F4860*6A*	G*E81155C**	41,000	29,900	14.00	11.60	1332796
	CA*F4860*6A*	G*V80905C**	41,000	29,900	14.00	11.60	1332797
	CA*F4860*6A*	G*V90905D**	41,000	29,900	14.00	11.60	1332798
	CA*F4860*6A*	G*V91155D**	41,000	29,900	14.00	11.60	1332799
	CA*F4860*6A*	G*V950905D**	41,000	29,900	14.00	11.60	1332800
	CA*F4860*6A*	G*V951155D**	41,000	29,900	14.00	11.60	1332801
	CA*F4860*6A*+EEP		41,000	29,900	13.00	11.10	1333001
	CA*F4860*6A*+MBE1600**-1		41,000	29,900	14.00	11.60	1332802
	CA*F4860*6B*	G*E80905C**	41,000	29,900	14.00	11.60	1333203
	CA*F4860*6B*	G*E81155C**	41,000	29,900	14.00	11.60	1333204
	CA*F4860*6B*	G*V80905C**	41,000	29,900	14.00	11.60	1333205
	CA*F4860*6B*	G*V90905D**	41,000	29,900	14.00	11.60	1333206
	CA*F4860*6B*	G*V91155D**	41,000	29,900	14.00	11.60	1333207
	CA*F4860*6B*	G*V950905D**	41,000	29,900	14.00	11.60	1333208
	CA*F4860*6B*	G*V951155D**	41,000	29,900	14.00	11.60	1333209
	CA*F4860*6B*+EEP		41,000	29,900	13.00	11.10	1333210
	CA*F4860*6B*+MBE1600**-1		41,000	29,900	14.00	11.60	1333157
	CHPF3642C6A*	G*E80905C**	40,000	29,200	13.50	11.30	1332803
	CHPF3642C6A*	G*V80905C**	40,000	29,200	13.50	11.30	1332804
	CHPF3642C6A*	G*V81155C**	40,000	29,200	13.50	11.30	1332805
	CHPF3642C6A*+EEP		40,000	29,200	13.00	11.10	1332806
	CHPF3642C6B*	G*E80905C**	40,000	29,200	13.50	11.30	1332807
	CHPF3642C6B*	G*V80905C**	40,000	29,200	13.50	11.30	1332808
	CHPF3642C6B*	G*V81155C**	40,000	29,200	13.50	11.30	1332809
	CHPF3642C6B*+EEP		40,000	29,200	13.00	11.10	1332810
	CHPF3642D6A*	G*E81155C**	40,000	29,200	13.50	11.30	1332811
	CHPF3642D6A*	G*V90905D**	40,000	29,200	13.50	11.30	1332812
	CHPF3642D6A*	G*V91155D**	40,000	29,200	13.50	11.30	1332813
	CHPF3642D6A*+EEP		40,000	29,200	13.00	11.10	1332814

See Notes on Page 37.

ARI PERFORMANCE RATINGS (CONT.)

Outdoor Unit	Indoor Units		Cooling Capacity (BTU/h)				ARI #
	Indoor Coil & Blower	Furnace	Total	Sensible	SEER[1]	EER[2]	
GSX13 0421A* (cont.)	CHPF3642D6B*	G*E81155C**	40,000	29,200	13.50	11.30	1332815
	CHPF3642D6B*	G*V90905D**	40,000	29,200	13.50	11.30	1332816
	CHPF3642D6B*	G*V91155D**	40,000	29,200	13.50	11.30	1332817
	CHPF3642D6B*+EEP		40,000	29,200	13.00	11.10	1332818
	CHPF4860D6A*	G*E80905C**	41,000	29,900	14.00	11.60	1332819
	CHPF4860D6A*	G*E81155C**	41,000	29,900	14.00	11.60	1332820
	CHPF4860D6A*	G*V80905C**	41,000	29,900	14.00	11.60	1332821
	CHPF4860D6A*	G*V81155C**	41,000	29,900	14.00	11.60	1332822
	CHPF4860D6A*	G*V90905D**	41,000	29,900	14.00	11.60	1332823
	CHPF4860D6A*	G*V91155D**	41,000	29,900	14.00	11.60	1332824
	CHPF4860D6A*	G*V951155D**	41,000	29,900	14.00	11.60	1332825
	CHPF4860D6A*+EEP		41,000	29,900	13.00	11.10	1332826
	CHPF4860D6A*+MBE1600**-1		41,000	29,900	14.00	11.60	1333045
	CHPF4860D6C*	G*E80905C**	41,000	29,900	14.00	11.60	1332827
	CHPF4860D6C*	G*E81155C**	41,000	29,900	14.00	11.60	1332828
	CHPF4860D6C*	G*V80905C**	41,000	29,900	14.00	11.60	1332829
	CHPF4860D6C*	G*V81155C**	41,000	29,900	14.00	11.60	1332830
	CHPF4860D6C*	G*V90905D**	41,000	29,900	14.00	11.60	1332831
	CHPF4860D6C*	G*V91155D**	41,000	29,900	14.00	11.60	1332832
	CHPF4860D6C*	G*V951155D**	41,000	29,900	14.00	11.60	1332833
	CHPF4860D6C*+EEP		41,000	29,900	13.00	11.10	1332834
	CHPF4860D6C*+MBE1600**-1		41,000	29,900	14.00	11.60	1333046
	CSCF3642N6A*+EEP		40,000	29,200	13.00	11.50	1332835
	CSCF3642N6C*+EEP		40,000	29,200	13.00	11.50	1332836
	CSCF4860N6A*	G*E80905C**	41,000	29,900	14.00	11.60	1332837
	CSCF4860N6A*	G*E81155C**	41,000	29,900	14.00	11.60	1332838
	CSCF4860N6A*	G*V80905C**	41,000	29,900	14.00	11.60	1332839
	CSCF4860N6A*	G*V81155C**	41,000	29,900	14.00	11.60	1332840
	CSCF4860N6A*	G*V90115D**	41,000	29,900	14.00	11.30	1332841
	CSCF4860N6A*	G*V90905D**	41,000	29,900	14.00	11.30	1332842
	CSCF4860N6A*	G*V951155D**	41,000	29,900	14.00	11.30	1332843
	CSCF4860N6A*+EEP		41,000	29,900	13.00	11.10	1332844
	CSCF4860N6C*	G*E80905C**	41,000	29,900	14.00	11.60	1333047
	CSCF4860N6C*	G*E81155C**	41,000	29,900	14.00	11.60	1333048
	CSCF4860N6C*	G*V80905C**	41,000	29,900	14.00	11.60	1333049
	CSCF4860N6C*	G*V81155C**	41,000	29,900	14.00	11.60	1333050
	CSCF4860N6C*	G*V90115D**	41,000	29,900	14.00	11.30	1333051
	CSCF4860N6C*	G*V90905D**	41,000	29,900	14.00	11.30	1333052
	CSCF4860N6C*	G*V951155D**	41,000	29,900	14.00	11.30	1333053
	CSCF4860N6C*+EEP		41,000	29,900	13.00	11.10	1333054
	CT*F3642*6A*	G*E80905C**	40,000	29,200	13.50	11.30	1449821

See Notes on Page 37.

ARI PERFORMANCE RATINGS (CONT.)

Outdoor Unit	Indoor Units		Cooling Capacity (BTU/h)				ARI #
	Indoor Coil & Blower	Furnace	Total	Sensible	SEER[1]	EER[2]	
GSX13 0421A* (cont.)	CT*F3642*6A*	G*V80905C**	40,000	29,200	13.50	11.30	1449822
	CT*F3642*6A*	G*V81155C**	40,000	29,200	13.50	11.30	1449823
	CT*F3642*6A*+EEP		40,000	29,200	13.00	11.10	1449824
	CT*F4860*6A*	G*E80905C**	41,000	29,900	14.00	11.60	1449825
	CT*F4860*6A*	G*E81155C**	41,000	29,900	14.00	11.60	1449826
	CT*F4860*6A*	G*V80905C**	41,000	29,900	14.00	11.60	1449827
	CT*F4860*6A*	G*V90905D**	41,000	29,900	14.00	11.60	1449828
	CT*F4860*6A*	G*V91155D**	41,000	29,900	14.00	11.60	1449829
	CT*F4860*6A*	G*V950905D**	41,000	29,900	14.00	11.60	1449830
	CT*F4860*6A*	G*V951155D**	41,000	29,900	14.00	11.60	1449831
	CT*F4860*6A*+EEP		41,000	29,900	13.00	11.10	1449832
	CT*F4860*6A*+MBE1600**-1		41,000	29,900	14.00	11.60	1449833
GSX13 0481A*	ADPF486016A*		46,000	34,500	13.00	11.30	1332845
	ADPF486016B*		46,000	34,500	13.00	11.30	1492502
	AEPF426016A*		46,000	34,500	14.00	11.60	1332846
	AEPF426016B*		46,000	34,500	14.00	11.60	1487023
	AR*F486016A*		46,000	34,500	13.00	11.30	1333055
	AR*F486016B*		46,000	34,500	13.00	11.30	1492503
	ASPF426016A*		46,000	34,500	14.00	11.60	1333084
	ASPF426016B*		46,000	34,500	14.00	11.60	1492504
	AT*F486016A*		46,000	34,500	13.00	11.30	1483513
	CA*F4860*6A*+EEP		46,000	34,500	13.00	11.30	1332847
	CA*F4860*6A*+MBE2000**-1		46,000	34,500	14.00	11.60	1332848
	CA*F4860*6A*+TXV	G*E80905C**	46,000	34,500	14.00	11.60	1332859
	CA*F4860*6A*+TXV	G*E81155C**	46,000	34,500	14.00	11.60	1332860
	CA*F4860*6A*+TXV	G*V80905C**	46,000	34,500	14.00	11.60	1332861
	CA*F4860*6A*+TXV	G*V81155C**	46,000	34,500	14.00	11.60	1332862
	CA*F4860*6A*+TXV	G*V90115D**	46,000	34,500	14.00	11.60	1332863
	CA*F4860*6A*+TXV	G*V90905D**	46,000	34,500	14.00	11.60	1332864
	CA*F4860*6A*+TXV	G*V950905D**	46,000	34,500	14.00	11.60	1332865
	CA*F4860*6A*+TXV	G*V951155D**	46,000	34,500	14.00	11.60	1332866
	CA*F4860*6B*+EEP		46,000	34,500	13.00	11.30	1333211
	CA*F4860*6B*+MBE2000**-1		46,000	34,500	14.00	11.60	1333158
	CA*F4860*6B*+TXV	G*E80905C**	46,000	34,500	14.00	11.60	1333212
	CA*F4860*6B*+TXV	G*E81155C**	46,000	34,500	14.00	11.60	1333213
	CA*F4860*6B*+TXV	G*V80905C**	46,000	34,500	14.00	11.60	1333214

[1] Seasonal Energy Efficiency Ratio; Certified per ARI 210/240 @ 80°F/ 67°F/ 95°F

[2] Energy Efficiency Ratio @ 80°F/ 67°F/ 95°F

Notes

- Always check the S&R plate for electrical data on the unit being installed.
- When matching the outdoor unit to the indoor unit, use the piston supplied with the outdoor unit or that specified on the piston kit chart supplied with the indoor unit.
- EEP - Order from Service Dept. Part No. B13707-38 or new Solid State Board B13707-35S. Part No. B13707-38 is not interchangeable with B13707-35S. The Goodman Gas Furnace contains the EEP cooling time delay

ARI Performance Ratings (cont.)

Outdoor Unit	Indoor Units		Cooling Capacity (BTU/h)				ARI #
	Indoor Coil & Blower	Furnace	Total	Sensible	SEER[1]	EER[2]	
GSX130 481A* (cont.)	CA*F4860*6B*+TXV	G*V81155C**	46,000	34,500	14.00	11.60	1333215
	CA*F4860*6B*+TXV	G*V90115D**	46,000	34,500	14.00	11.60	1333216
	CA*F4860*6B*+TXV	G*V90905D**	46,000	34,500	14.00	11.60	1333217
	CA*F4860*6B*+TXV	G*V950905D**	46,000	34,500	14.00	11.60	1333218
	CA*F4860*6B*+TXV	G*V951155D**	46,000	34,500	14.00	11.60	1333219
	CHPF4860D6A*+EEP		46,000	34,500	13.00	11.30	1332849
	CHPF4860D6A*+MBE2000**-1		46,000	34,500	14.00	11.60	1332850
	CHPF4860D6A*+TXV	G*E80905C**	46,000	34,500	14.00	11.60	1332867
	CHPF4860D6A*+TXV	G*E81155C**	46,000	34,500	14.00	11.60	1332868
	CHPF4860D6A*+TXV	G*V80905C**	46,000	34,500	14.00	11.60	1332869
	CHPF4860D6A*+TXV	G*V81155C**	46,000	34,500	14.00	11.60	1332870
	CHPF4860D6A*+TXV	G*V90115D**	46,000	34,500	14.00	11.60	1332871
	CHPF4860D6A*+TXV	G*V90905D**	46,000	34,500	14.00	11.60	1332872
	CHPF4860D6A*+TXV	G*V950905D**	46,000	34,500	14.00	11.60	1332873
	CHPF4860D6A*+TXV	G*V951155D**	46,000	34,500	14.00	11.60	1332874
	CHPF4860D6C*+EEP		46,000	34,500	13.00	11.30	1332851
	CHPF4860D6C*+MBE2000**-1		46,000	34,500	14.00	11.60	1333056
	CHPF4860D6C*+TXV	G*E80905C**	46,000	34,500	14.00	11.60	1332875
	CHPF4860D6C*+TXV	G*E81155C**	46,000	34,500	14.00	11.60	1332876
	CHPF4860D6C*+TXV	G*V80905C**	46,000	34,500	14.00	11.60	1332877
	CHPF4860D6C*+TXV	G*V81155C**	46,000	34,500	14.00	11.60	1332878
	CHPF4860D6C*+TXV	G*V90115D**	46,000	34,500	14.00	11.60	1332879
	CHPF4860D6C*+TXV	G*V90905D**	46,000	34,500	14.00	11.60	1332880
	CHPF4860D6C*+TXV	G*V950905D**	46,000	34,500	14.00	11.60	1332881
	CHPF4860D6C*+TXV	G*V951155D**	46,000	34,500	14.00	11.60	1332882
	CSCF4860N6A*+EEP		46,000	34,500	13.00	11.30	1332852
	CSCF4860N6A*+TXV	G*E80905C**	46,000	34,500	14.00	11.60	1332883
	CSCF4860N6A*+TXV	G*E81155C**	46,000	34,500	14.00	11.60	1332884
	CSCF4860N6A*+TXV	G*V80905C**	46,000	34,500	14.00	11.60	1332885
	CSCF4860N6A*+TXV	G*V81155C**	46,000	34,500	14.00	11.60	1332886
	CSCF4860N6A*+TXV	G*V90115D**	46,000	34,500	14.00	11.60	1332887
	CSCF4860N6A*+TXV	G*V90905D**	46,000	34,500	14.00	11.60	1332888
	CSCF4860N6A*+TXV	G*V950905D**	46,000	34,500	14.00	11.60	1332889
	CSCF4860N6A*+TXV	G*V951155D**	46,000	34,500	14.00	11.60	1332890
	CSCF4860N6C*+EEP		46,000	34,500	13.00	11.30	1333057
	CSCF4860N6C*+TXV	G*E80905C**	46,000	34,500	14.00	11.60	1333058
	CSCF4860N6C*+TXV	G*E81155C**	46,000	34,500	14.00	11.60	1333059
	CSCF4860N6C*+TXV	G*V80905C**	46,000	34,500	14.00	11.60	1333060
	CSCF4860N6C*+TXV	G*V81155C**	46,000	34,500	14.00	11.60	1333061
	CSCF4860N6C*+TXV	G*V90115D**	46,000	34,500	14.00	11.60	1333062
	CSCF4860N6C*+TXV	G*V90905D**	46,000	34,500	14.00	11.60	1333063

See Notes on Page 37.

ARI Performance Ratings (cont.)

Outdoor Unit	Indoor Units		Cooling Capacity (BTU/h)				ARI #
	Indoor Coil & Blower	Furnace	Total	Sensible	SEER[1]	EER[2]	
GSX130 481A* (cont.)	CSCF4860N6C*+TXV	G*V950905D**	46,000	34,500	14.00	11.60	1333064
	CSCF4860N6C*+TXV	G*V951155D**	46,000	34,500	14.00	11.60	1333065
	CT*F4860*6A*+EEP		46,000	34,500	13.00	11.30	1449834
	CT*F4860*6A*+MBE2000**-1		46,000	34,500	14.00	11.60	1449835
	CT*F4860*6A*+TXV	G*E80905C**	46,000	34,500	14.00	11.60	1449836
	CT*F4860*6A*+TXV	G*E81155C**	46,000	34,500	14.00	11.60	1449837
	CT*F4860*6A*+TXV	G*V80905C**	46,000	34,500	14.00	11.60	1449838
	CT*F4860*6A*+TXV	G*V81155C**	46,000	34,500	14.00	11.60	1449839
	CT*F4860*6A*+TXV	G*V90905D**	46,000	34,500	14.00	11.60	1449840
	CT*F4860*6A*+TXV	G*V91155D**	46,000	34,500	14.00	11.60	1449841
	CT*F4860*6A*+TXV	G*V950905D**	46,000	34,500	14.00	11.60	1449842
	CT*F4860*6A*+TXV	G*V951155D**	46,000	34,500	14.00	11.60	1449843
GSX13 0601A*	ADPF486016A*		57,000	39,900	13.00	11.10	1332853
	ADPF486016B*		57,000	39,900	13.00	11.10	1492505
	AEPF426016A*		57,000	39,900	13.50	11.40	1332854
	AEPF426016B*		57,000	39,900	13.50	11.40	1487024
	AR*F486016A*		57,000	39,900	13.00	11.10	1333066
	AR*F486016B*		57,000	39,900	13.00	11.10	1492506
	ASPF426016A*		57,000	39,900	13.50	11.40	1333085
	ASPF426016B*		57,000	39,900	13.50	11.40	1492507
	AT*F486016A*		57,000	39,900	13.00	11.10	1483514
	CA*F4860*6A*+EEP		57,000	39,900	13.00	11.10	1332855
	CA*F4860*6A*+MBE2000**-1		57,000	39,900	13.50	11.40	1333012
	CA*F4860*6A*+TXV	G*E80905C**	57,000	39,900	13.50	11.40	1332891
	CA*F4860*6A*+TXV	G*E81155C**	57,000	39,900	13.50	11.40	1332892
	CA*F4860*6A*+TXV	G*V80905C**	57,000	39,900	13.50	11.40	1332893
	CA*F4860*6A*+TXV	G*V81155C**	57,000	39,900	13.50	11.40	1332894
	CA*F4860*6A*+TXV	G*V90905D**	57,000	39,900	13.50	11.40	1332895
	CA*F4860*6A*+TXV	G*V950905D**	57,000	39,900	13.50	11.40	1332896
	CA*F4860*6A*+TXV	G*V951155D**	57,000	39,900	13.50	11.40	1332897
	CA*F4860*6B*+EEP		57,000	39,900	13.00	11.10	1333220
	CA*F4860*6B*+MBE2000**-1		57,000	39,900	13.50	11.40	1333159
	CA*F4860*6B*+TXV	G*E80905C**	57,000	39,900	13.50	11.40	1333221
	CA*F4860*6B*+TXV	G*E81155C**	57,000	39,900	13.50	11.40	1333222
	CA*F4860*6B*+TXV	G*V80905C**	57,000	39,900	13.50	11.40	1333223
	CA*F4860*6B*+TXV	G*V81155C**	57,000	39,900	13.50	11.40	1333224
	CA*F4860*6B*+TXV	G*V90905D**	57,000	39,900	13.50	11.40	1333225
	CA*F4860*6B*+TXV	G*V950905D**	57,000	39,900	13.50	11.40	1333226
	CA*F4860*6B*+TXV	G*V951155D**	57,000	39,900	13.50	11.40	1333227
	CHPF4860D6A*+EEP		57,000	39,900	13.00	11.10	1332856
	CHPF4860D6A*+MBE2000**-1		57,000	39,900	13.50	11.40	1333013

See Notes on Page 37.

ARI PERFORMANCE RATINGS (CONT.)

Outdoor Unit	Indoor Units		Cooling Capacity (BTU/h)				ARI #
	Indoor Coil & Blower	Furnace	Total	Sensible	SEER[1]	EER[2]	
GSX13 0601A* (cont.)	CHPF4860D6A*+TXV	G*E80905C**	57,000	39,900	13.50	11.40	1332898
	CHPF4860D6A*+TXV	G*E81155C**	57,000	39,900	13.50	11.40	1332899
	CHPF4860D6A*+TXV	G*V80905C**	57,000	39,900	13.50	11.40	1332900
	CHPF4860D6A*+TXV	G*V81155C**	57,000	39,900	13.50	11.40	1332901
	CHPF4860D6A*+TXV	G*V90115D**	57,000	39,900	13.50	11.40	1332902
	CHPF4860D6A*+TXV	G*V90905D**	57,000	39,900	13.50	11.40	1332903
	CHPF4860D6A*+TXV	G*V951155D**	57,000	39,900	13.50	11.40	1332904
	CHPF4860D6C*+EEP		57,000	39,900	13.00	11.10	1332857
	CHPF4860D6C*+MBE2000**-1		57,000	39,900	13.50	11.40	1333067
	CHPF4860D6C*+TXV	G*E80905C**	57,000	39,900	13.50	11.40	1332905
	CHPF4860D6C*+TXV	G*E81155C**	57,000	39,900	13.50	11.40	1332906
	CHPF4860D6C*+TXV	G*V80905C**	57,000	39,900	13.50	11.40	1332907
	CHPF4860D6C*+TXV	G*V81155C**	57,000	39,900	13.50	11.40	1332908
	CHPF4860D6C*+TXV	G*V90115D**	57,000	39,900	13.50	11.40	1332909
	CHPF4860D6C*+TXV	G*V90905D**	57,000	39,900	13.50	11.40	1332910
	CHPF4860D6C*+TXV	G*V951155D**	57,000	39,900	13.50	11.40	1332911
	CSCF4860N6A*+EEP		57,000	39,900	13.00	11.40	1332858
	CSCF4860N6A*+TXV	G*E80905C**	57,000	39,900	13.50	11.40	1332912
	CSCF4860N6A*+TXV	G*E81155C**	57,000	39,900	13.50	11.40	1332913
	CSCF4860N6A*+TXV	G*V80905C**	57,000	39,900	13.50	11.40	1332914
	CSCF4860N6A*+TXV	G*V81155C**	57,000	39,900	13.50	11.40	1332915
	CSCF4860N6A*+TXV	G*V90115D**	57,000	39,900	13.50	11.40	1333002
	CSCF4860N6A*+TXV	G*V90905D**	57,000	39,900	13.50	11.40	1332916
	CSCF4860N6A*+TXV	G*V951155D**	57,000	39,900	13.50	11.40	1333003
	CSCF4860N6C*+EEP		57,000	39,900	13.00	11.40	1333068
	CSCF4860N6C*+TXV	G*E80905C**	57,000	39,900	13.50	11.40	1333069
	CSCF4860N6C*+TXV	G*E81155C**	57,000	39,900	13.50	11.40	1333070
	CSCF4860N6C*+TXV	G*V80905C**	57,000	39,900	13.50	11.40	1333071
	CSCF4860N6C*+TXV	G*V81155C**	57,000	39,900	13.50	11.40	1333072
	CSCF4860N6C*+TXV	G*V90115D**	57,000	39,900	13.50	11.40	1333073
	CSCF4860N6C*+TXV	G*V90905D**	57,000	39,900	13.50	11.40	1333074
	CSCF4860N6C*+TXV	G*V951155D**	57,000	39,900	13.50	11.40	1333075
	CT*F4860*6A*+EEP		57,000	39,900	13.00	11.10	1449844
	CT*F4860*6A*+MBE2000**-1		57,000	39,900	13.50	11.40	1449845
	CT*F4860*6A*+TXV	G*E80905C**	57,000	39,900	13.50	11.40	1449846
	CT*F4860*6A*+TXV	G*E81155C**	57,000	39,900	13.50	11.40	1449847
	CT*F4860*6A*+TXV	G*V80905C**	57,000	39,900	13.50	11.40	1449848
	CT*F4860*6A*+TXV	G*V81155C**	57,000	39,900	13.50	11.40	1449849
	CT*F4860*6A*+TXV	G*V90905D**	57,000	39,900	13.50	11.40	1449850
	CT*F4860*6A*+TXV	G*V950905D**	57,000	39,900	13.50	11.40	1449851
	CT*F4860*6A*+TXV	G*V951155D**	57,000	39,900	13.50	11.40	1449852

See Notes on Page 37.

WIRING DIAGRAM — GSX13(18-60)1A

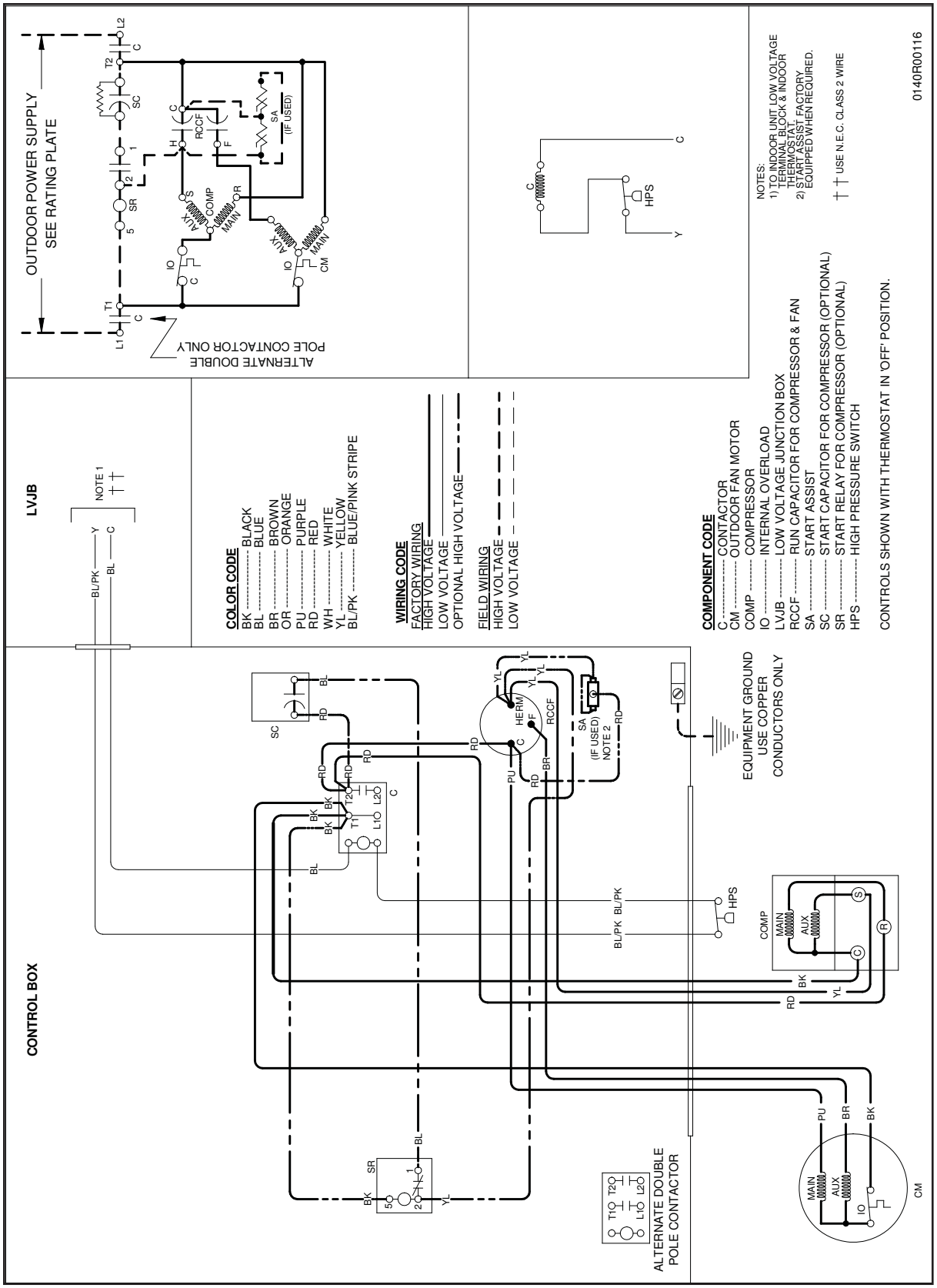

WARNING

High Voltage:
Disconnect all power before servicing or installing this unit. Multiple power sources may be present. Failure to do so may cause property damage, personal injury, or death.

Wiring is subject to change. Always refer to the wiring diagram or the unit for the most up-to-date wiring.

WIRING DIAGRAM — GSX13(18-48)1B

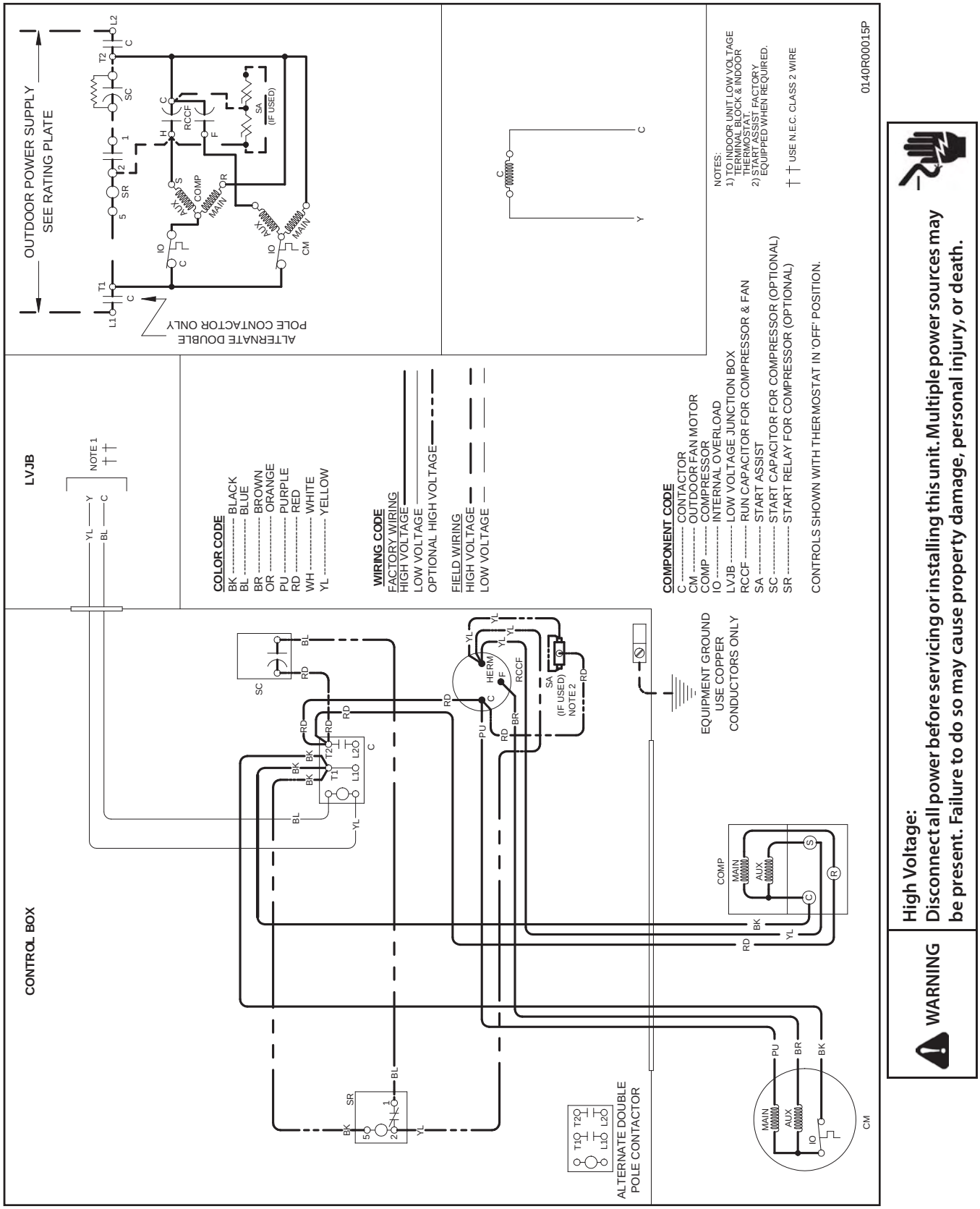

WARNING

High Voltage:
Disconnect all power before servicing or installing this unit. Multiple power sources may be present. Failure to do so may cause property damage, personal injury, or death.

Wiring is subject to change. Always refer to the wiring diagram or the unit for the most up-to-date wiring.

Accessories

Model	Description	GSX13 018	GSX13 024	GSX13 030	GSX13 036	GSX13 042	GSX13 048	GSX13 060
ABK-20	Anchor Bracket Kit *	X	X	X	X	X	X	X
ASC-01	Anti-Short Cycle Kit	X	X	X	X	X	X	X
CSR-U-1	Hard-start Kit	X	X	X	X			
CSR-U-2	Hard-start Kit					X	X	X
CSR-U-3	Hard-start Kit						X	X
FSK01A[1]	Freeze Protection Kit	X	X	X	X	X	X	X
LSK01A[2]	Liquid Line Solenoid Kit	X	X	X	X	X	X	X
TX2N4[2]	TXV Kit	X						
TX3N4[2]	TXV Kit	X	X	X	X			
TX5N4[2]	TXV Kit					X	X	X

* Contains 20 brackets; four brackets needed to anchor unit to pad

[1] Installed on indoor coil

[2] Field-installed, non-bleed, expansion valve kit — Condensing units and heat pumps with reciprocating compressors require the use of start-assist components when used in conjunction with an indoor coil using a non-bleed thermal expansion valve refrigerant metering device or liquid line solenoid kit.

Notes

Goodman Manufacturing Company, L.P., reserves the right to discontinue, or change at any time, specifications or designs without notice or without incurring obligations.
Copyright © 2008 • Goodman Manufacturing Company, L.P. • Houston, Texas • Printed in the USA.